SERVICE MANUAL
ELECTRICAL TROUBLESHOOTING
VOLUME 2

ALL MODELS
SERIAL NUMBERS 470000 THRU 6299999

THE GRASSHOPPER COMPANY
Moundridge, Kansas 67107 U.S.A.
(620) 345-8621
GRASSHOPPERMOWER.COM

Price $12.00

Form 172111-160216
Printed in U.S.A.

INTRODUCTION

This manual has been developed to diagnose component failures only. It will not indicate a problem in the wiring or terminals. For example, if the troubleshooting guide indicates that the left steering switch is defective and replacing the left steering switch does not solve the problem; then you may have bad terminals or wiring to that switch.

Consult the operator's manual wiring diagram for the specific year and model of the machine you are working on for troubleshooting. For further assistance, contact The Grasshopper Company, service department at (620)345-8621.

TABLE OF CONTENTS

(continued)

TABLE OF CONTENTS
(CONTINUED)

SWITCH FUNCTIONS

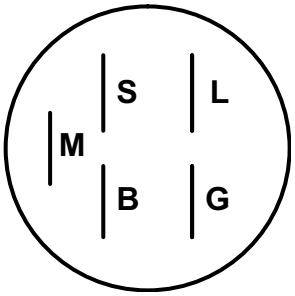

Ignition switch, part no. 183806.
(All Briggs, Kawasaki & Kohler Models).

M Magneto terminal.
S Starter terminal.
B Battery terminal.
L Lights, accessory terminal.
G Ground terminal.

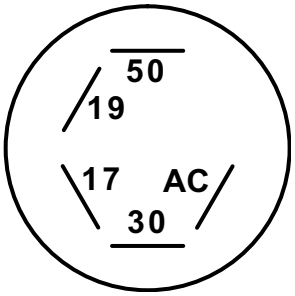

Ignition switch, part no. 183827.
(All Kubota Models).

30 Battery terminal.
50 Starter terminal.
AC Accessory terminal.
17 Glow plug terminal (Diesel only).
19 Glow plug indicator terminal (Diesel only).

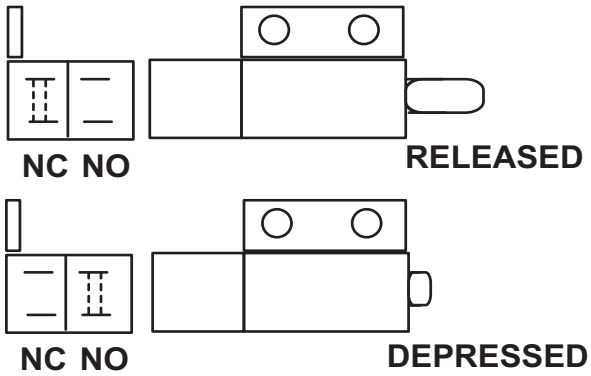

Brake switch, part no. 183894.

NC (normally closed) - means that the contact is closed and current will flow between these two terminals. When the button is depressed, these two terminals become open.

NO (normally open) - means that the contact is open with the switch mechanism released. When the button is depressed, these two terminals become closed.

The dotted line indicates an electrical connection between the two terminal posts.

SWITCH FUNCTIONS

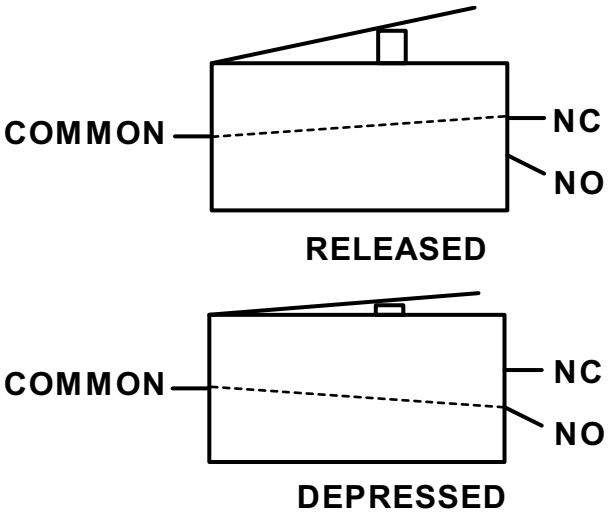

Left and right steering switch, part no. 183860.

NC (normally closed) - means that the contact is closed with the switch mechanism released. The contact position is reversed when the switch lever is depressed.

NO (normally open) - means that the contact is open with the switch mechanism released. The contact position is reversed when the switch lever is depressed.

The dotted line indicates an electrical connection between the two terminal posts.

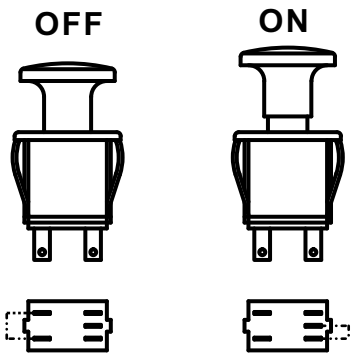

PTO switch, part no. 183925.
The dotted line indicates an electrical connection between the two terminal posts.

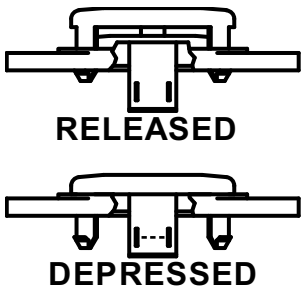

Seat switch, part no. 183870.
The dotted line indicates an electrical connection between the two terminal posts.

TROUBLESHOOTING CONTROL RELAYS

ALL KUBOTA GASOLINE MODELS

1. Control relay - inspection.
   A. Control relay A has 2 red wires, 1 black wire, 1 yellow wire and 1 green wire in the relay socket.
   B. Control relay B has 3 blue wires and 1 green wire in the relay socket.
2. Assuming the main fuse, PTO fuse, ignition fuse are good, failure of control relay A or associated wiring will be evidenced by the following three symptoms:
   A. PTO clutch will not engage.
   B. Hourmeter will not run.
   C. Ignition coil will not have any voltage on the positive terminal*
3. Assuming the start fuse is good, failure of control relay B or associated wiring will result in starter solenoid not engaging; thus the starter motor will not operate.

ALL KUBOTA DIESEL MODELS

1. Control relay - inspection.
   A. Control relay A has 2 red wires, 1 black wire, 1 yellow wire and 1 green wire in the relay socket.
   B. Control relay B has 3 blue wires and 1 green wire in the relay socket.
2. Assuming the main fuse, PTO fuse, ignition fuse are good, failure of control relay A or associated wiring will be evidenced by the following three symptoms:
   A. PTO clutch will not engage.
   B. Hourmeter will not run.
   C. Fuel solenoid will pull in but not hold.
3. Assuming the start fuse is good, failure of control relay B or associated wiring will result in starter solenoid not engaging; thus the starter motor will not operate.

* (On 432 and 932, the plug which leads to igniter assembly will not have any voltage).

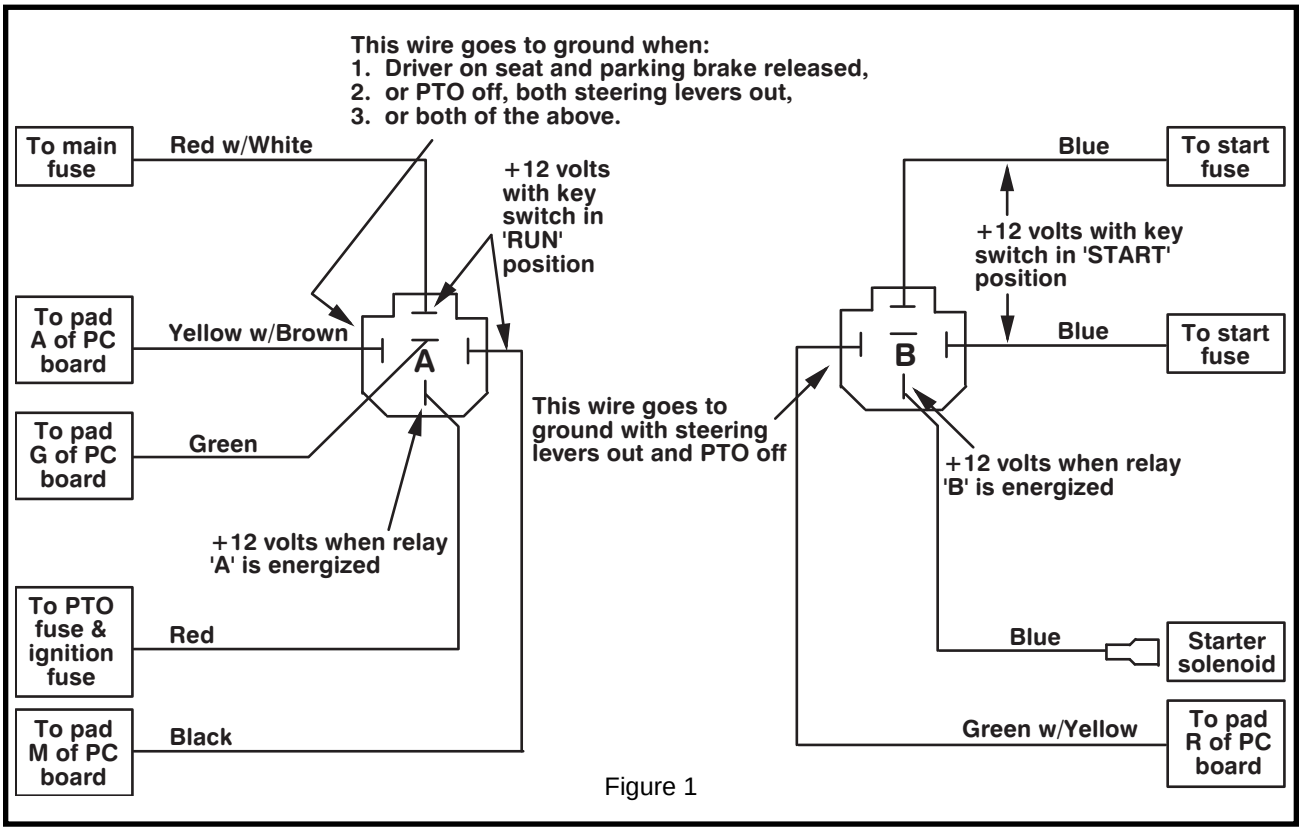

Figure 1

CONTROL RELAY - ALL KUBOTA MODELS

Assuming a normal diode on the circuit , board, relay B is affected by a problem in the circuit containing the PTO switch, and left and right steering switches.

Assuming a normal diode on the circuit board, relay A is affected by a problem in the circuit containing the PTO switch, and left and right steering switches. It is also affected by a problem in the circuit containing the parking brake switch and seat switch.

Circuit Board with Diode

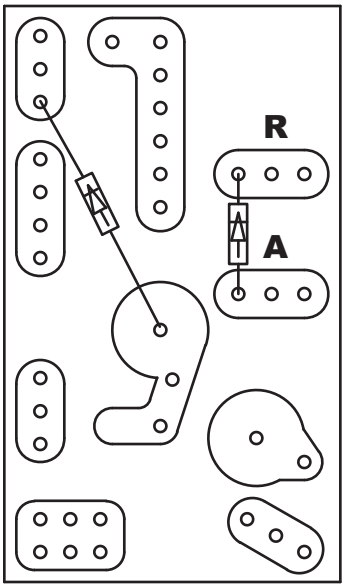

Figure 2

CIRCUIT BOARD DIODE PROBLEMS - ALL MODELS

Refer to the illustration below (figure 2) to locate the diode on the circuit board between pad R and A.

Open Diode

An open diode will result in the following symptoms:

Assuming steering levers out and PTO switch off, engine can be cranked and started only with driver on the seat and the parking brake in the 'OFF' position.

If driver gets off of the seat or puts parking brake to the 'ON' position, the engine will die.

Shorted Diode

Assuming an operator on the seat and parking brake is 'OFF', engine can be cranked and started with PTO switch in the 'ON' position or steering levers in.

THIS PAGE IS INTENTIONALLY LEFT BLANK

TESTING SAFETY SYSTEM FOR PROPER OPERATION

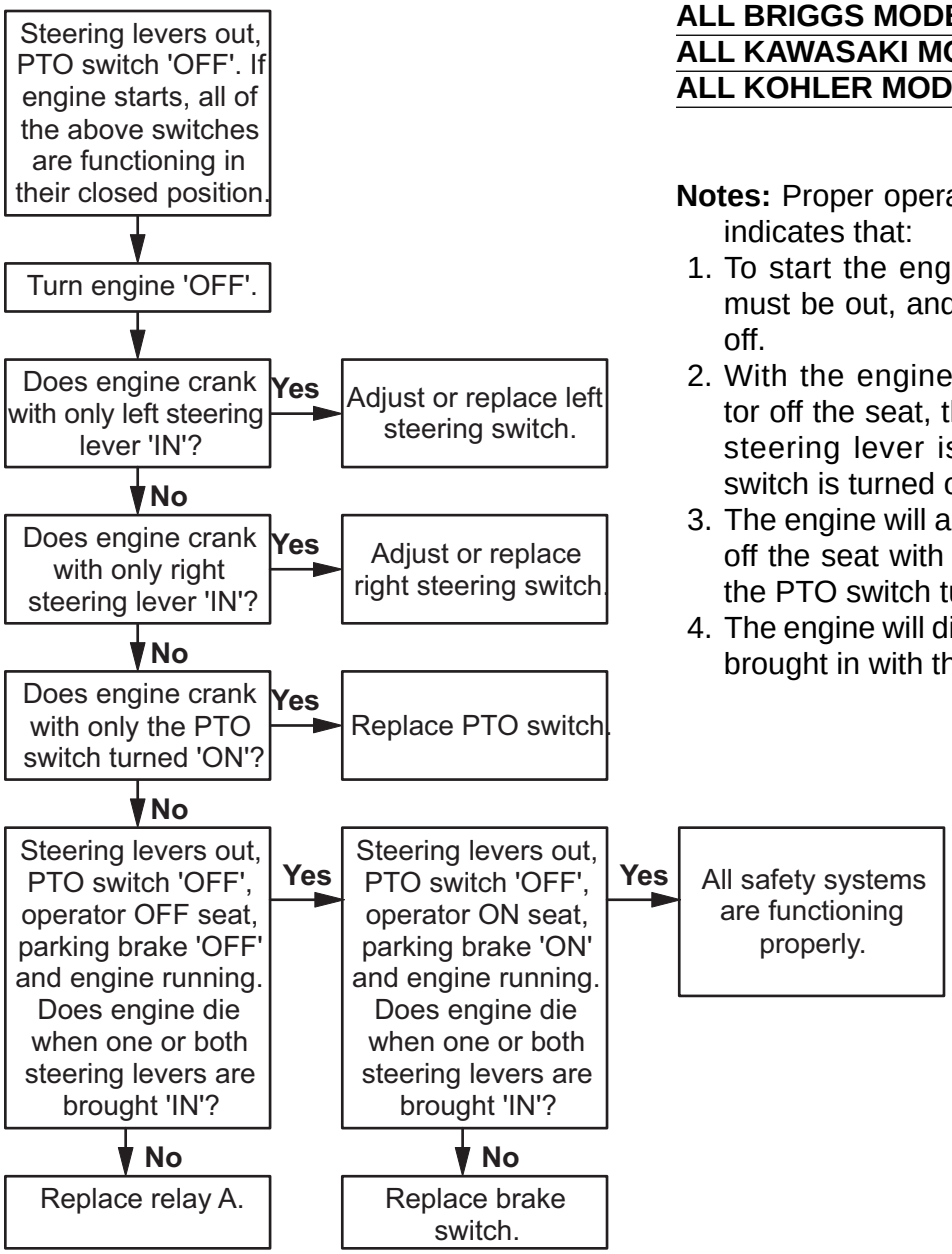

ALL BRIGGS MODELS
ALL KAWASAKI MODELS
ALL KOHLER MODELS

Notes: Proper operation of the safety system indicates that:

1. To start the engine, both steering levers must be out, and the PTO switch must be off.
2. With the engine running and the operator off the seat, the engine will die if either steering lever is brought in or the PTO switch is turned on.
3. The engine will also die if the operator gets off the seat with either steering lever in or the PTO switch turned on.
4. The engine will die if the steering levers are brought in with the parking brake on.

TESTING SAFETY SYSTEM FOR PROPER OPERATION

ALL KUBOTA MODELS

Notes: Proper operation of the safety system indicates that:

1. To start the engine, both steering levers must be out, and the PTO switch must be off. The engine will start with the operator on or off the seat and the parking brake either on or off.
2. With the engine running and the operator off the seat, the engine will die if either steering lever is brought in or the PTO switch is turned on.
3. The engine will also die if the operator gets off the seat with either steering lever in or the PTO switch turned on.
4. The engine will die if the steering levers are brought in with the parking brake on.

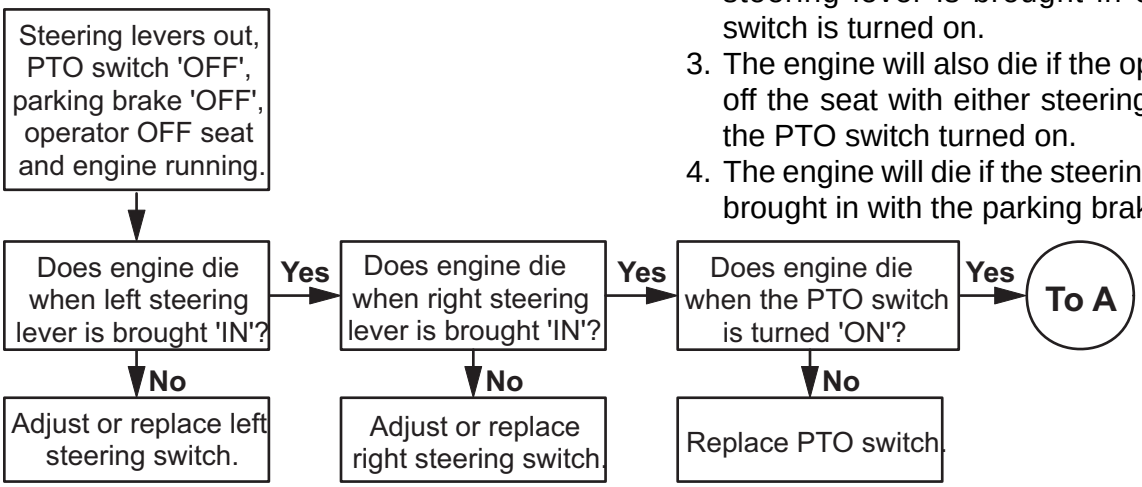

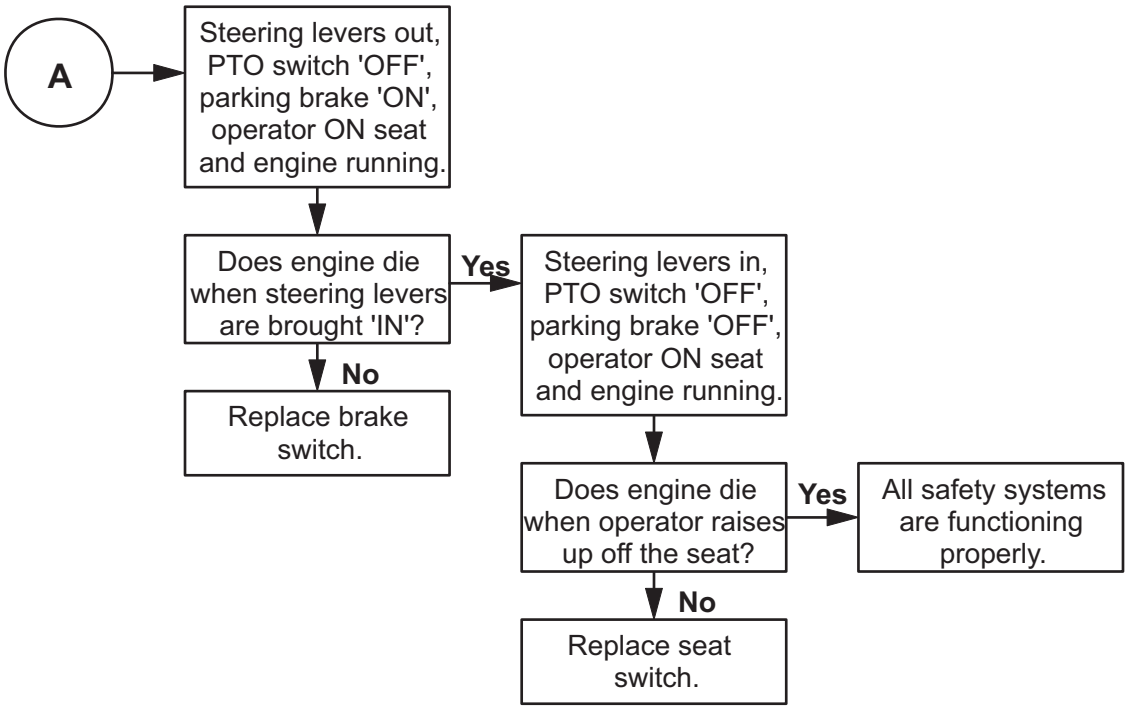

BATTERY CHARGING SYSTEM

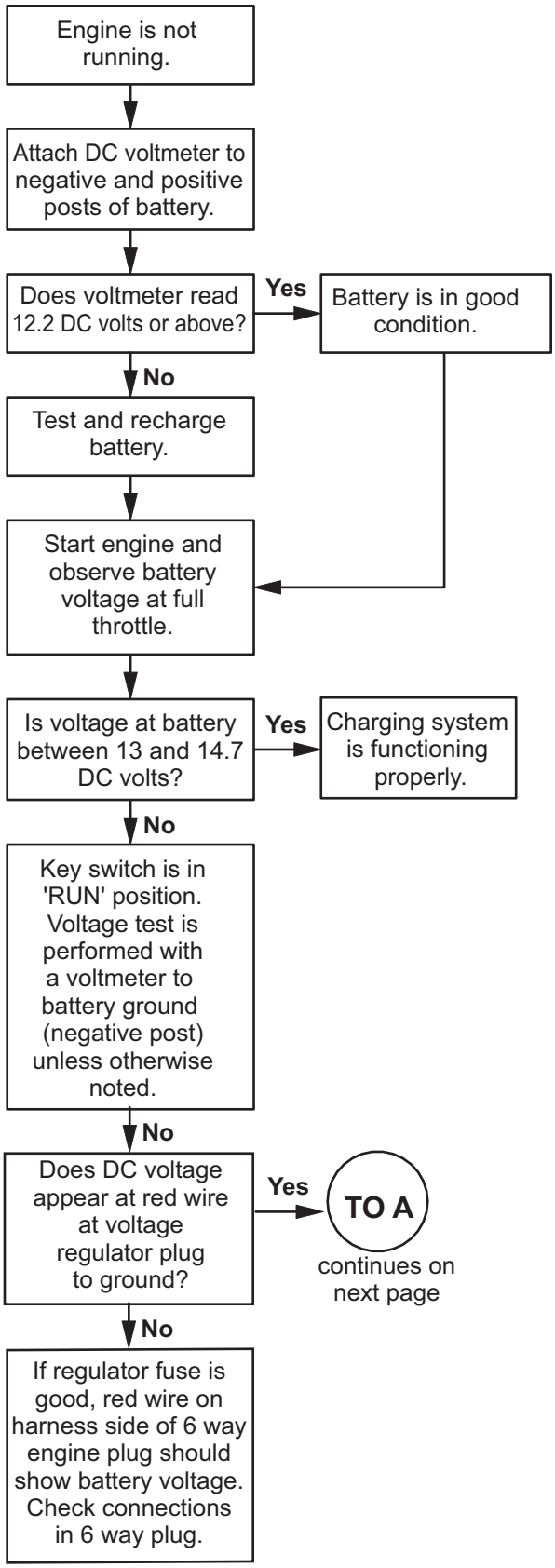

ALL KAWASAKI MODELS

Notes:

1. Voltage tests are performed with a DC/AC voltmeter.
2. Tests are performed after regulator fuse is checked.
3. AC voltage tests are performed with engine at 3600 rpm.

BATTERY CHARGING SYSTEM
(CONTINUED)

ALL KAWASAKI MODELS

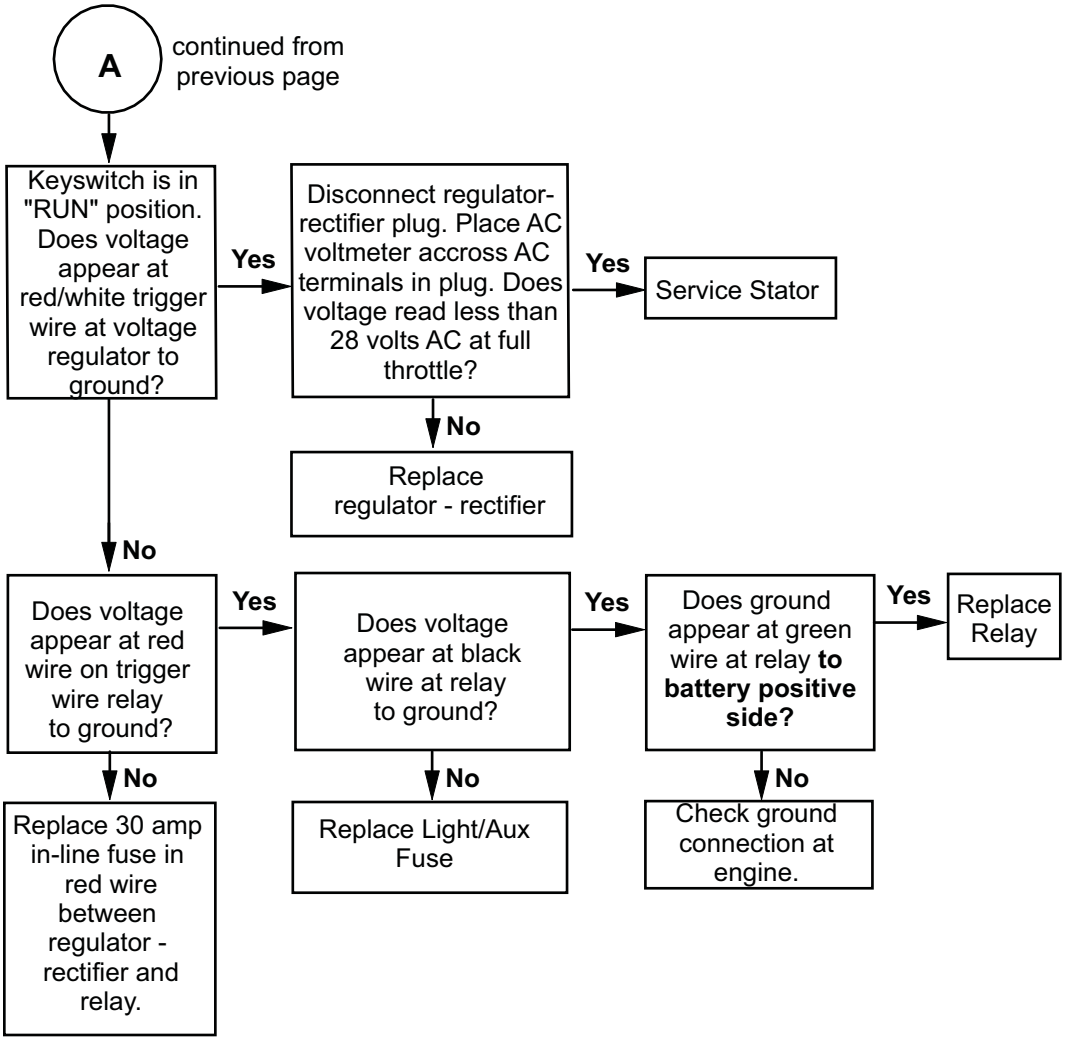

BATTERY CHARGING SYSTEM

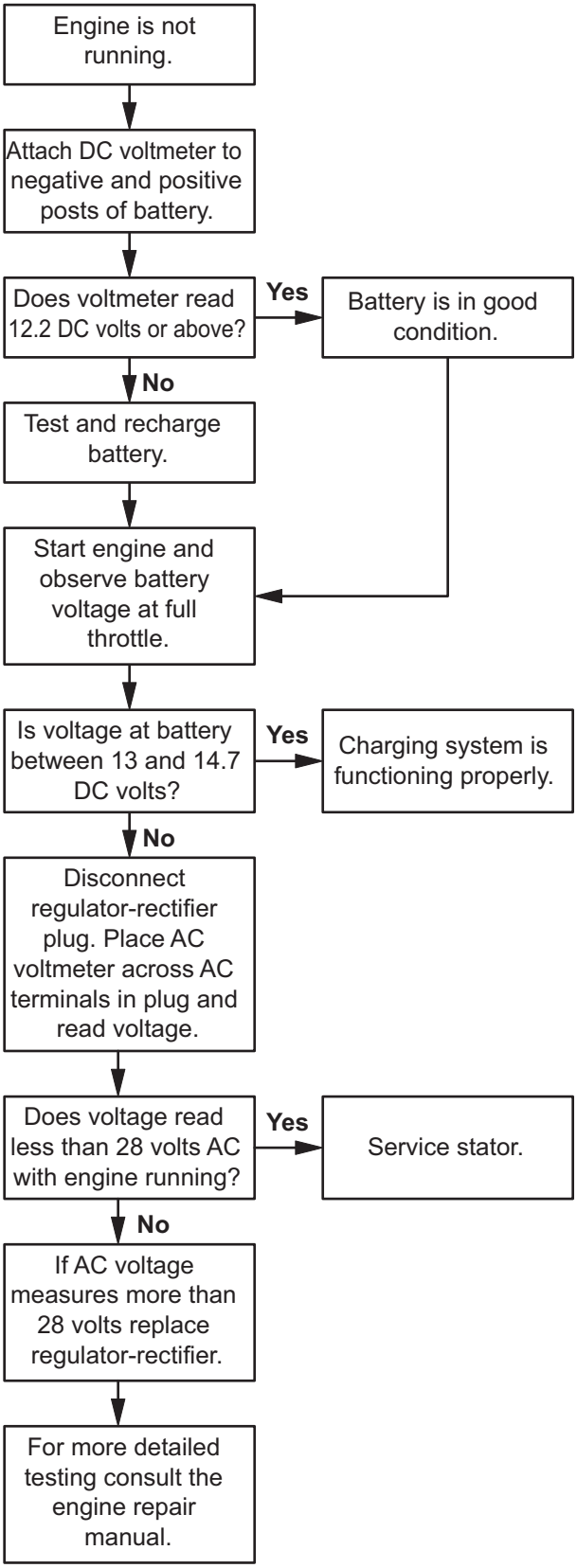

ALL BRIGGS MODELS
ALL KOHLER MODELS

Notes:

1. Voltage tests are performed with a DC/AC voltmeter.
2. Tests are performed after regulator fuse is checked.
3. AC voltage tests are performed with engine at 3600 rpm.

BATTERY CHARGING SYSTEM

ALL KUBOTA MODELS WITH SMOOTH ALTERNATORS

Notes:

1. Voltage tests are performed with a DC/AC voltmeter.
2. Tests are performed after regulator fuse is checked.
3. AC voltage tests are performed with engine at full RPM.

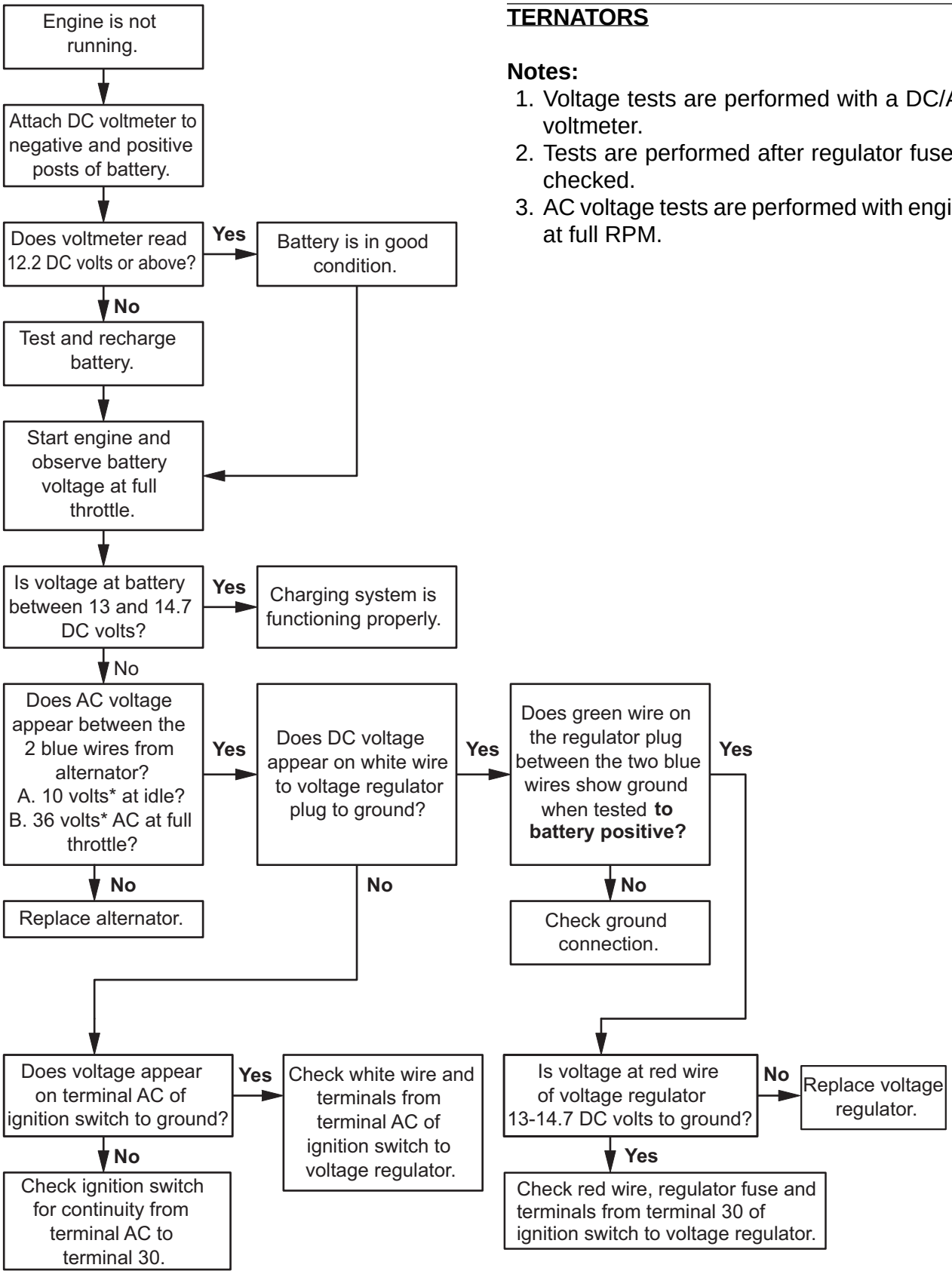

*voltage may vary + or - 3 volts.

BATTERY CHARGING SYSTEM

ALL KUBOTA MODELS WITH ALUMINUM/FINNED ALTERNATORS

Notes:

1. Tests are performed after regulator fuse is checked.
2. Set voltmeter to DC voltage for testing on this page.

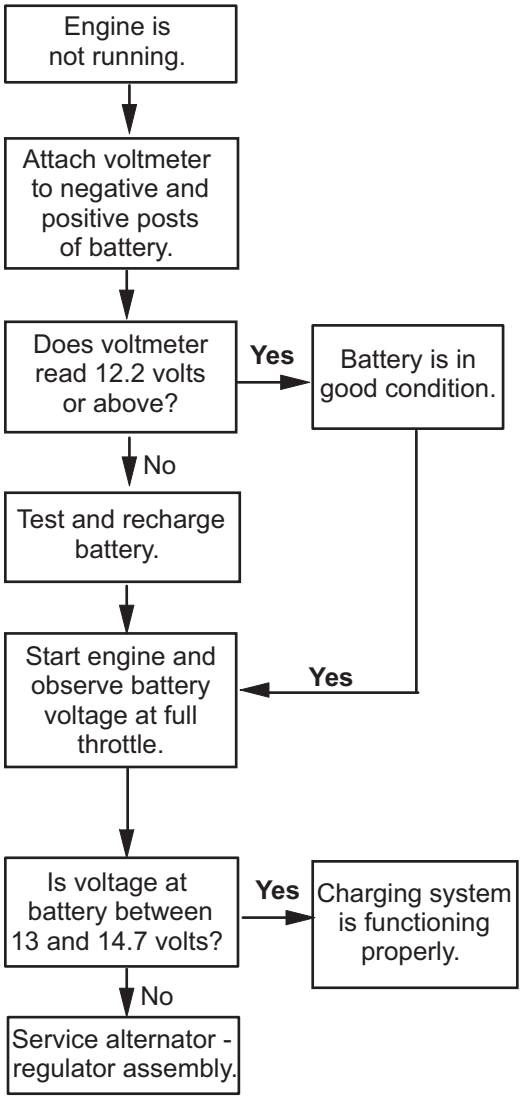

THIS PAGE IS INTENTIONALLY LEFT BLANK

ENGINE WILL NOT CRANK

120, 124 & 126 BRIGGS
226V BRIGGS
ALL 600 SERIES MODELS (EXCEPT 618 2003 & UP)
718 BRIGGS

Notes:

1. Voltage tests are performed with a DC voltmeter.

Test battery for condition and charge.

↓

Steering levers out, PTO switch 'OFF'. Voltage tests are performed with a voltmeter or test light to battery ground.

↓

Key switch is in 'START' position for each test.

↓

Does voltage appear from terminal 'C' of start fuse? (See Figure 9 or 10)

- **Yes** → Does voltage appear from terminal 'D' of start fuse?
  - **No** → Replace start fuse.
  - **Yes** → If there is voltage at terminal 'D' of start fuse, there should also be voltage on blue wire at starter solenoid.
    - **Yes** → **To A** continues on next page
- **No** → Problem is the key switch or the power to the key switch.

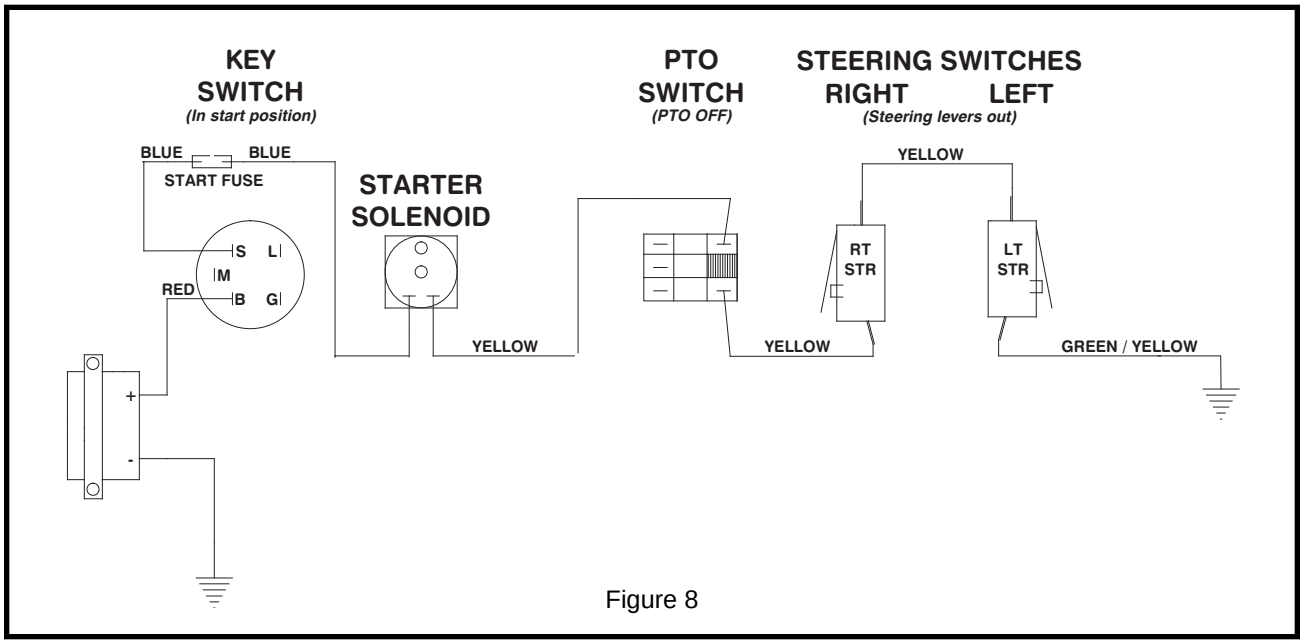

Figure 8

ENGINE WILL NOT CRANK
(CONTINUED)

120, 124 & 126 BRIGGS
226V BRIGGS
ALL 600 SERIES MODELS (EXCEPT 618 2003 & UP)
718 BRIGGS

continued from previous page

A

Key switch is in 'OFF' position for each test. You are now testing a ground circuit. All tests will be to the battery positive side.

Does the yellow wire at starter solenoid show ground when tested?
- **Yes** → Check starter solenoid. Problem could be starter solenoid or starter.
- **No** ↓

Does either yellow wire on PTO switch show ground when tested?
- **Yes** → Replace PTO switch.
- **No** ↓

Do either yellow wires on right steering switch show ground when tested?
- **Yes** → Right steering switch is defective or out of adjustment.
- **No** ↓

Do either yellow wires on left steering switch show ground when tested?
- **Yes** → Left steering switch is defective or out of adjustment.
- **No** ↓

Check ground junction with green wires on engine.

Fuse Block Test Points
120, 124, 126, 226V & 600 Series

Fuse block styles will vary.
Be sure you are checking designated fuse.

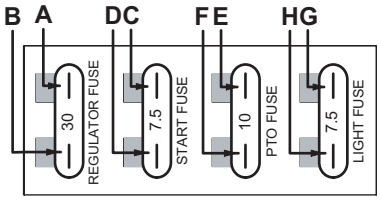

Figure 9

Fuse Block Test Points
718 Briggs

Fuse block styles will vary.
Be sure you are checking designated fuse.

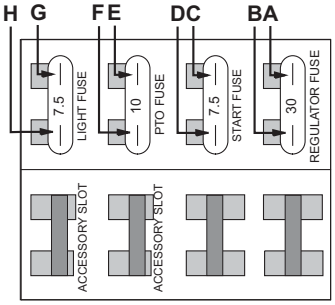

Figure 10

ENGINE WILL NOT CRANK

329B, 335B, 729BT[6] & 735BT[6] BRIGGS BIG BLOCK MODELS
120K KOHLER
ALL 200 SERIES MODELS EXCEPT 226V
ALL 700 SERIES KOHLER MODELS
618 2003 & UP
ALL KAWASAKI MODELS

Notes:

1. Do not forget to plug starter relay back in when finished testing.

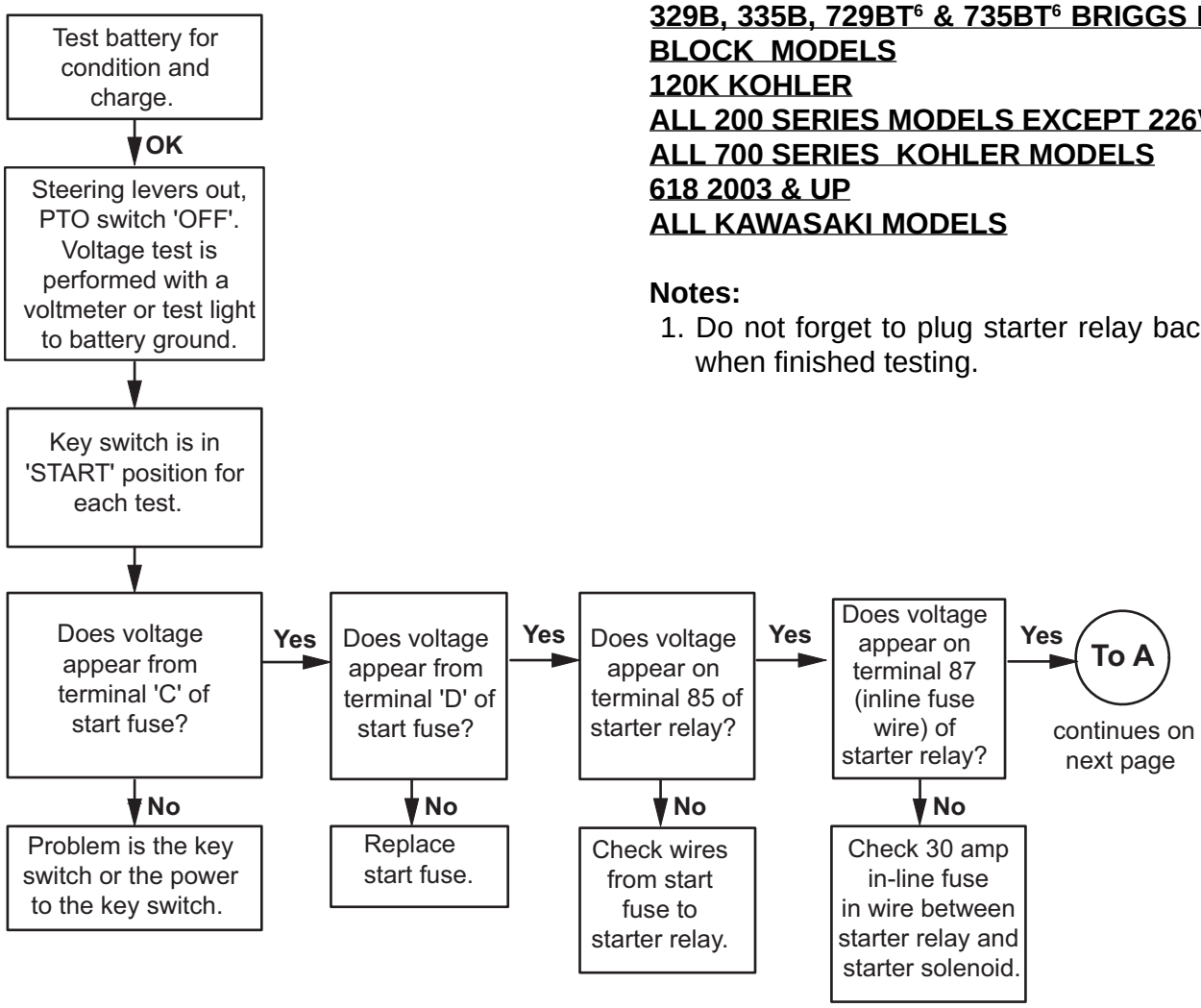

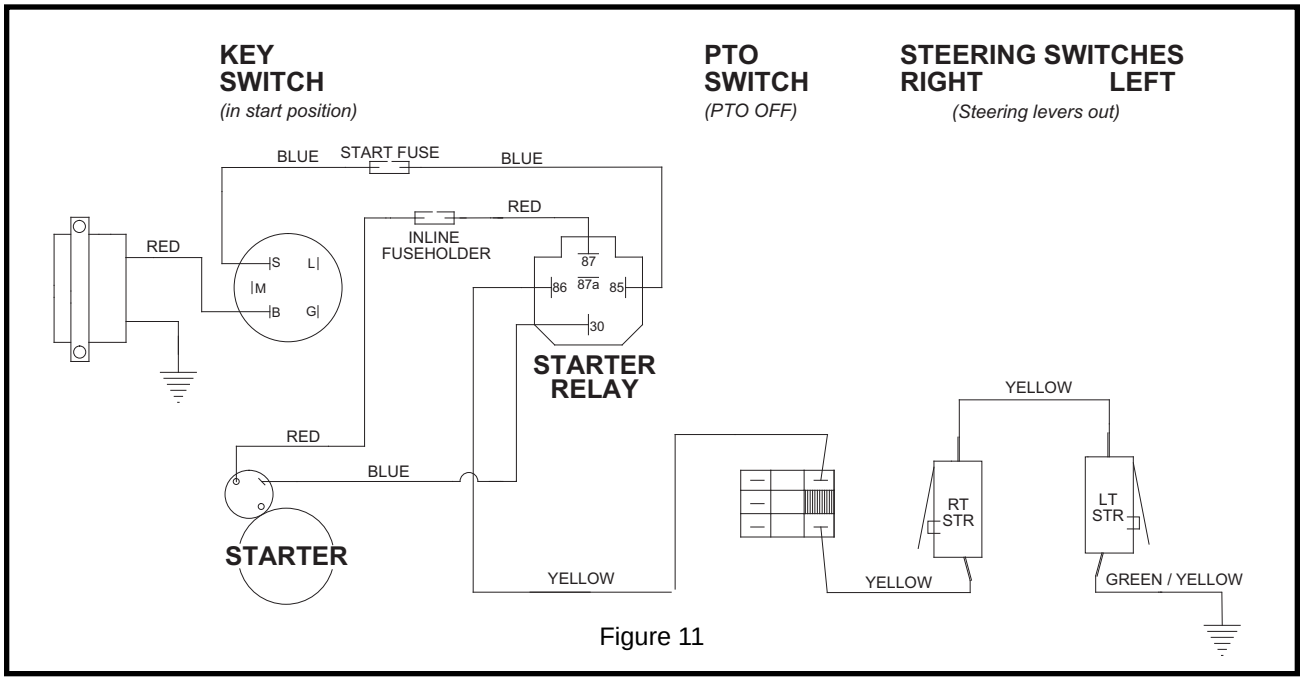

Figure 11

ENGINE WILL NOT CRANK
(CONTINUED)

A continued from previous page

Does voltage appear on terminal 30 of starter relay?
- **Yes** → Check starter solenoid. Problem could be starter solenoid or starter.
- **No** ↓

Key switch is in 'OFF' position for each test. You are now testing a ground circuit. All tests will be to the battery positive side.

Remove the starter relay. It is located on the inside of the frame, on the left side of the engine on Kohler models and on the right side of the Kawasaki models.

Does the yellow wire **without** the in-line fuse show ground when tested?
- **Yes** → Replace the starter relay.
- **No** ↓

Does either yellow wire on PTO switch show ground when tested?
- **Yes** → Replace PTO switch.
- **No** ↓

Does either yellow wire on right steering switch show ground when tested?
- **Yes** → Right steering switch is defective or out of adjustment.
- **No** ↓

Does either yellow wire on left steering switch show ground when tested?
- **Yes** → Left steering switch is defective or out of adjustment.
- **No** ↓

Check ground at engine.

329B, 335B, 729BT[6] & 735BT[6] BRIGGS BIG BLOCK MODELS
120K KOHLER
ALL 200 SERIES MODELS EXCEPT 226V
ALL 700 SERIES KOHLER MODELS
618 2003 & UP
ALL KAWASAKI MODELS

Fuse Block Test Points

Fuse block styles will vary.
Be sure you are checking designated fuse.

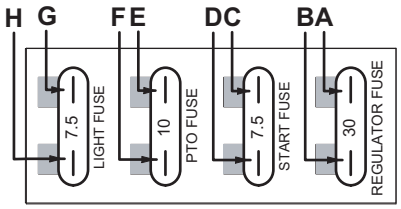

700 Series Kohler Models
All Kawasaki Models

Fuse block styles will vary.
Be sure you are checking designated fuse.

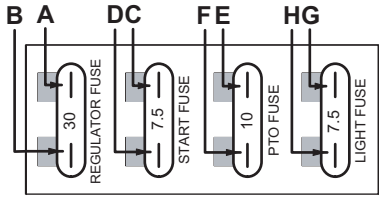

120K
All 200 Series Models
618 2003 & up
All Briggs Big Block Models

Figure 13

Starter Relay Testing

- **If all safety switches are correct, terminal 86 is grounded.**
- **Terminal 87 is 12 volts.**
- **Terminal 85 is +12 volts when key switch is in 'START' position.**
- **Terminal 30 is +12 volts when relay is energized.**

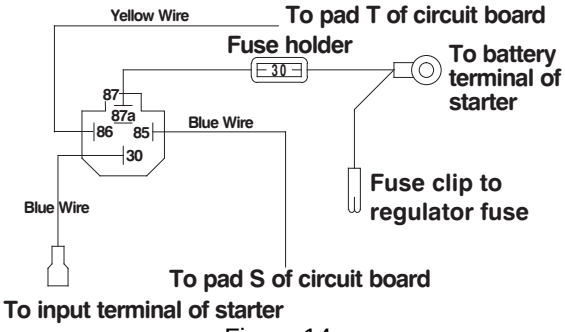

Figure 14

ENGINE WILL NOT CRANK

ALL KUBOTA MODELS

Test battery for condition and charge.

OK

Steering levers out, PTO switch 'OFF'. Voltage test is performed with a voltmeter or test light to battery ground.

Key switch is in 'START' position for each test.

Does voltage appear from terminal 'I' of start fuse?

Yes → Does voltage appear from terminal 'J' of start fuse?

Yes → Does voltage appear on blue wire at starter solenoid?

Yes → Check starter solenoid. Problem could be starter solenoid or starter.

No → Problem is the key switch or the power to the key switch.

No → Replace start fuse.

No → **To A**

continues on next page

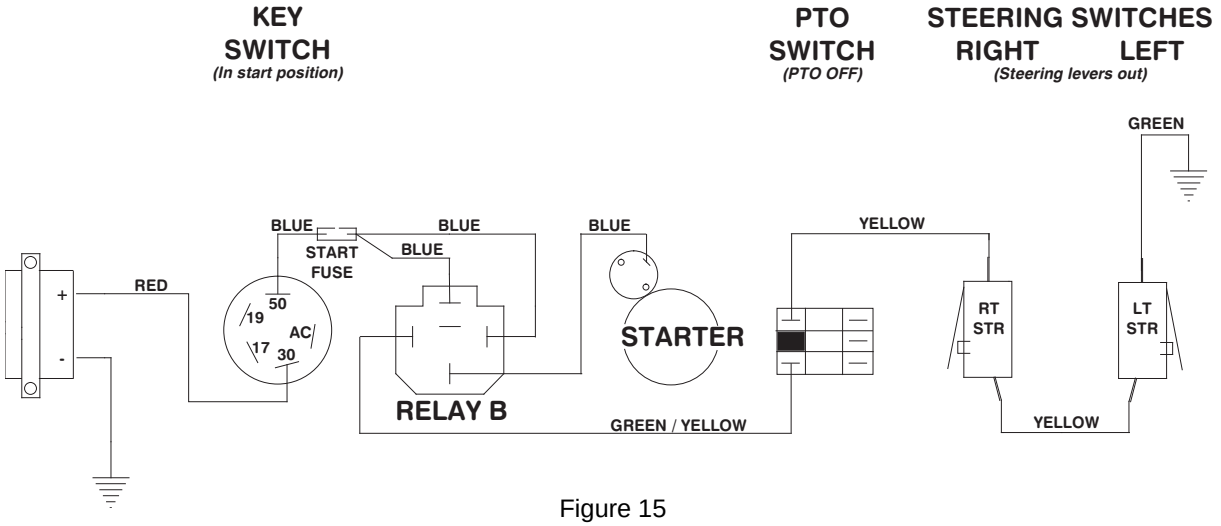

Figure 15

ENGINE WILL NOT CRANK
(CONTINUED)

ALL KUBOTA MODELS

A continued from previous page

No

Key switch is in 'OFF' position for each test. You are now testing a ground circuit. All tests will be to the battery positive side.

Remove relay 'B'. It is the relay with 3 blue wires and 1 yellow wire in the plug.

Does the green/ yellow wire on the plug of relay 'B' show ground when tested?

Yes → Replace relay 'B'.

No

Do both wires on left steering switch show ground when tested?

Yes → Do both yellow wires on right steering switch show ground when tested?

Yes → Replace PTO switch.

No → Before replacing the steering switch, check adjustment. If it does not click when steering levers are moved in and out adjust the switch.

Replace left steering switch.

No → Before replacing the steering switch, check adjustment. If it does not click when steering levers are moved in and out adjust the switch.

Replace right steering switch.

Relay B

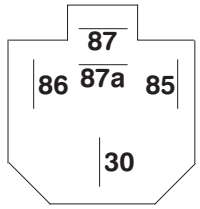

Figure 16

Fuse Block Test Points

Fuse block styles will vary.
Be sure you are checking designated fuse.

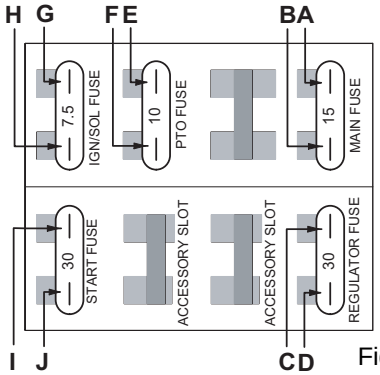

Figure 17

ENGINE WILL CRANK, BUT NOT START

ALL BRIGGS MODELS
ALL KAWASAKI MODELS
ALL KOHLER MODELS

Notes:

1. Tests are performed after LIGHT/AUX fuse has been checked on all models, check fuel pump fuse on Kawasaki Models.

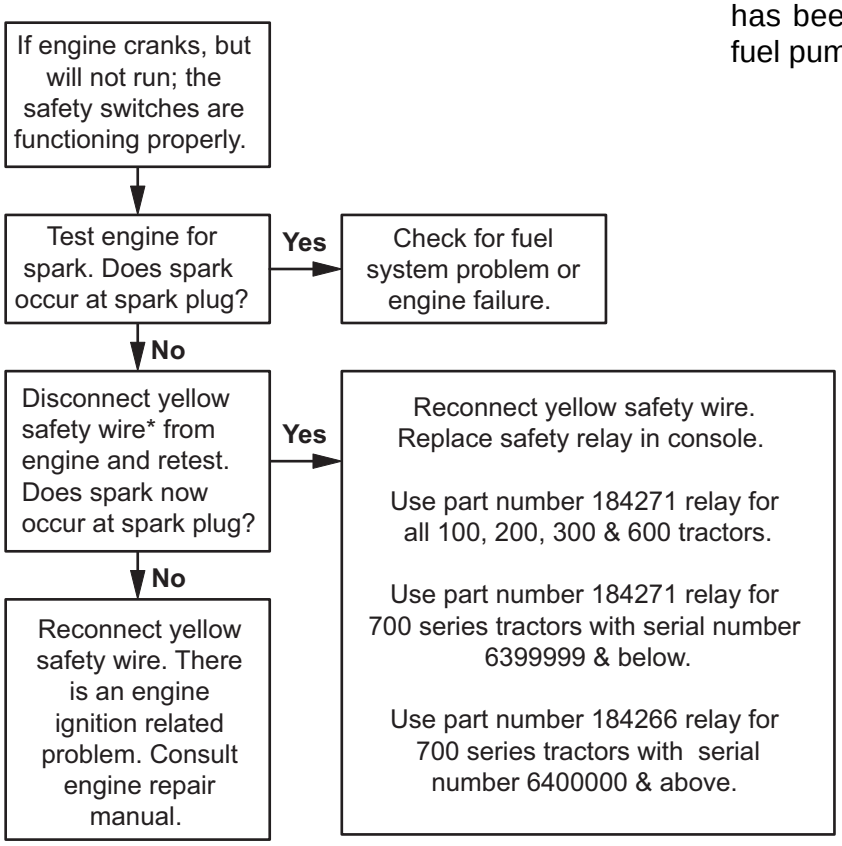

* Briggs engine excluding Briggs Big Block:	Single yellow wire on left side of engine.
Kohler & Briggs Big Block engine:	Disconnect plug on left side of engine. Using a small screwdriver, release the lock tab on yellow wire in tractor side plug and remove wire. Reconnect the plug.
Kawasaki engine:	Disconnect plug on right side of engine. Using a small screwdriver, release the lock tab on yellow wire in tractor side plug and remove wire. Reconnect the plug.

Warning!

With the yellow wire disconnected from the engine, all safety functions and the key switch will be inoperable in their ability to shutoff the engine. This step is performed for test purposes only. Under no conditions should the PTO be turned ON or the machine be driven with the yellow wire disconnected! Always reconnect the yellow wire to the engine after this test.

ENGINE WILL CRANK, BUT NOT START

ALL KUBOTA GASOLINE MODELS

Notes:

1. All tests are made with wires in place on their respective switches.
2. Refer to fuse block diagram for terminal locations.
3. Refer to “Troubleshooting Control Relays” for information on the diode and control relays.
4. If engine will crank, control relay “B” is functioning properly. This means that the PTO switch, right steering switch and left steering switch are functioning properly.

Steering levers out, PTO switch 'OFF'. Voltage tests are performed with a voltmeter or test light to battery ground (negative post).

↓

Key switch is in 'RUN' position for each test until otherwise noted.

↓

Does voltage appear from black wire on positive terminal of ignition coil to ground? * — **Yes** → Problem is in ignition coil or distributor. Consult Kubota engine manual for repair.

↓ **No**

Does voltage appear from terminal 'G' of ignition fuse to ground? — **Yes** → Replace ignition fuse.

↓ **No**

Does voltage appear from terminal 'A' of main fuse to ground? — **Yes** → Does voltage appear from terminal 'B' of main fuse to ground? — **Yes** → Replace control relay A.

↓ **No**

Does voltage appear from terminal 'B' of main fuse to ground? — **No** → Replace main fuse.

↓ **No**

Does voltage appear from terminal 30 (battery) of key switch to ground? — **Yes** → Replace key switch.

↓ **No**

Test battery.

Replace key switch.

* For models 329/729 & 432/932, test for voltage at red wire in white 2-way plug located directly below carburetor on engine.

Fuse Block Test Points

Fuse block styles will vary.
Be sure you are checking designated fuse.

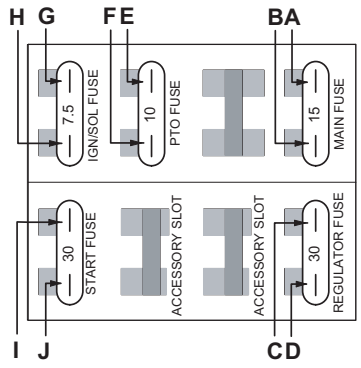

Figure 18

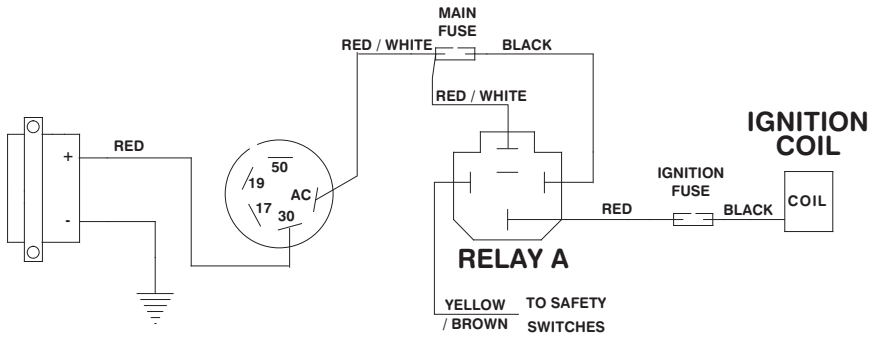

Figure 19

ENGINE WILL CRANK, BUT NOT START

ALL KUBOTA DIESEL MODELS EXCEPT THOSE WITH D902 ENGINES

Notes:

1. All tests are made with wires in place on their respective switches.
2. Refer to fuse block diagram for terminal locations.
3. Refer to “Troubleshooting Control Relays” for information on the diode and control relays.
4. If engine will crank, control relay “B” is functioning properly. This means that the PTO switch, right steering switch and left steering switch are functioning properly.

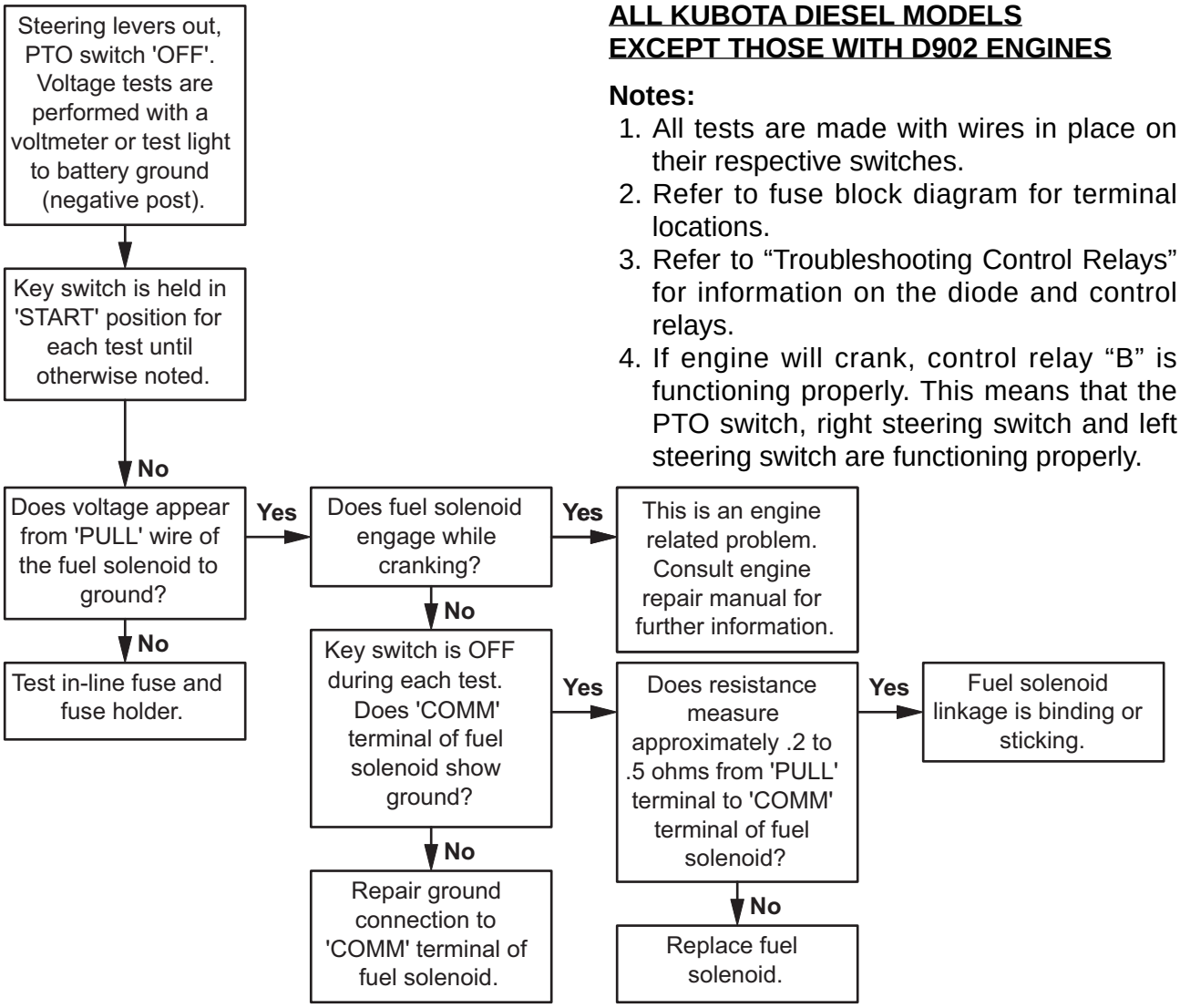

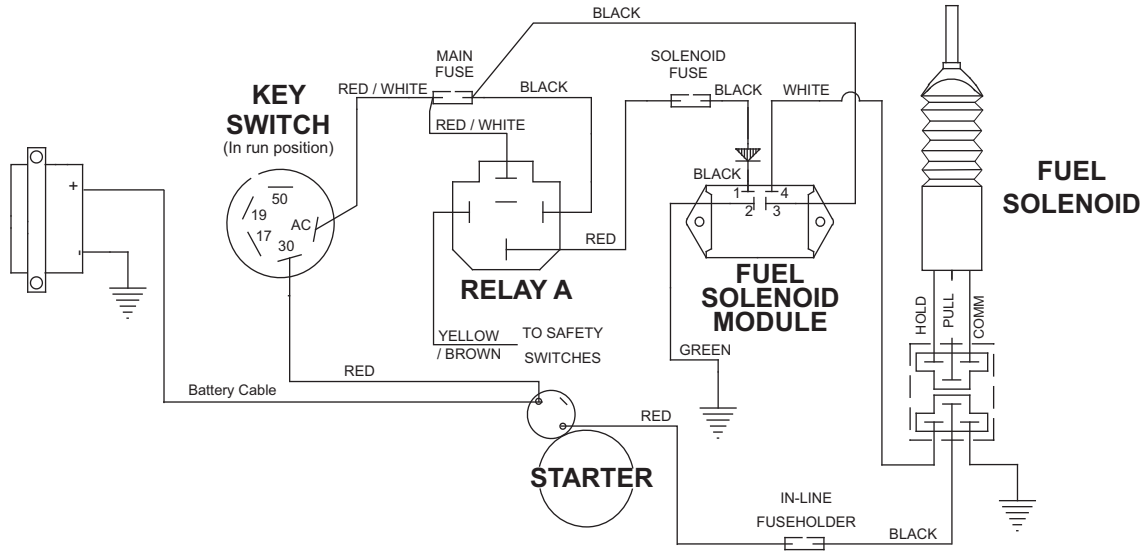

Figure 20

KUBOTA DIESEL MODELS WITH D902 ENGINES

If engine will crank, control relay "B" is functioning properly. This means that the PTO switch, right steering switch and left steering switch are functioning properly.

Check if fuel solenoid is binding or has a broken spring. See Owner's Manual for location of the manual fuel stop lever. If lever can be pushed forward against spring pressure, fuel solenoid is operating properly. If lever is already forward, is binding, or has no spring resistance, replace fuel solenoid.

ENGINE STARTS, BUT DIES WHEN STEERING LEVERS ARE BROUGHT IN OR PTO SWITCH IS ENGAGED

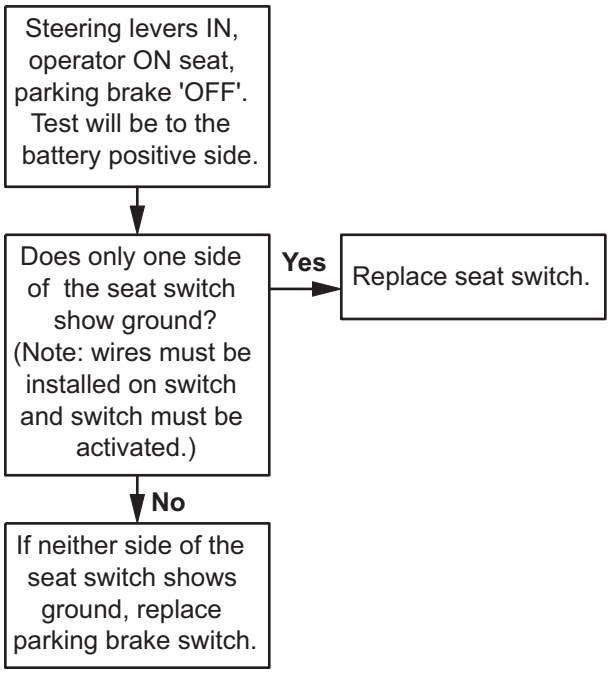

ALL BRIGGS MODELS
ALL KAWASAKI MODELS
ALL KOHLER MODELS

Notes:
If engine will crank and start, the PTO switch, right steering switch and left steering switch are functioning properly. The problem must be the parking brake or seat switch.

ENGINE STARTS, BUT DIES WHEN STEERING LEVERS ARE BROUGHT IN OR PTO SWITCH IS ENGAGED

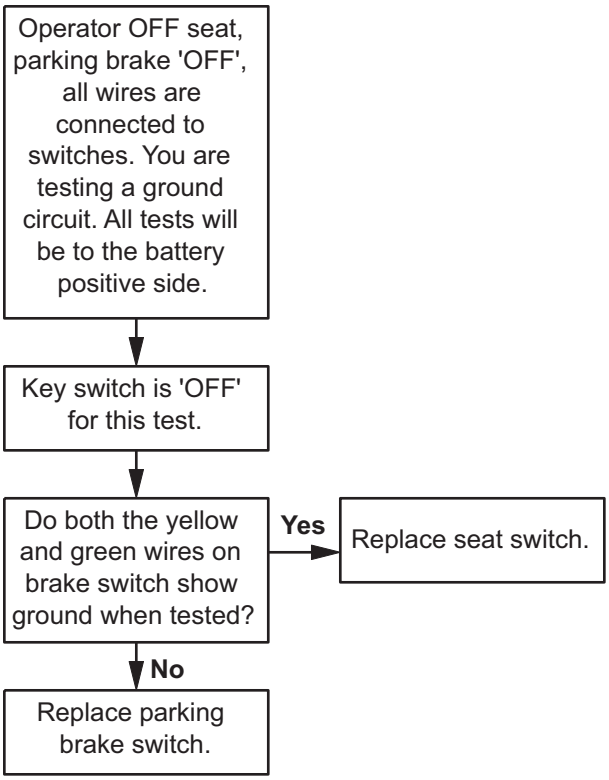

ALL KUBOTA MODELS

Notes:
If engine will crank and start, control relay A and control relay B are functioning properly. The PTO switch, right steering switch and left steering switch are functioning properly. The problem must be the parking brake or seat switch.

Brake Switch Test Points

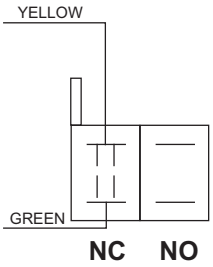

Brake switch view

Figure 21

ENGINE STARTS, BUT DIES WHEN KEY SWITCH IS RELEASED

ALL KUBOTA DIESEL MODELS EXCEPT THOSE WITH D902 ENGINES

Notes:

1. All tests are made with wires in place on their respective switches.
2. Problem is in the 'HOLD' circuit of the fuel solenoid.
3. Relay A is the relay with 1 yellow, 1 black and 2 red wires.

Steering levers OUT, PTO switch 'OFF', parking brake 'OFF'. Voltage tests are performed with a voltmeter or test light to battery ground (negative post), unless otherwise noted.

↓

Key switch is in 'RUN' position for each test unless otherwise noted.

↓ **No**

Does voltage appear from terminal 'A' of main fuse to ground? (Refer to figure 23)

- **Yes** → Does voltage appear from terminal 'B' of main fuse to ground?
- **No** → Replace key switch.

Does voltage appear from terminal 'B' of main fuse to ground?

- **Yes** → Does voltage appear from terminal '1' of fuel solenoid module to ground? (Refer to figure 22)
- **No** → Replace main fuse.

Does voltage appear from terminal '1' of fuel solenoid module to ground? (Refer to figure 22)

- **Yes** → **To A** continues on next page
- **No** → Does voltage appear from terminal 'G' of ignition/solenoid fuse to ground?
  - **Yes** → Replace ignition/solenoid fuse.
  - **No** → Replace control relay A. This is the relay with 1 yellow, 1 black and 2 red wires.

Fuel Solenoid Module Test Points

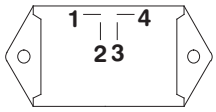

Figure 22

Fuse Block Test Points

Fuse block styles will vary.
Be sure you are checking designated fuse.

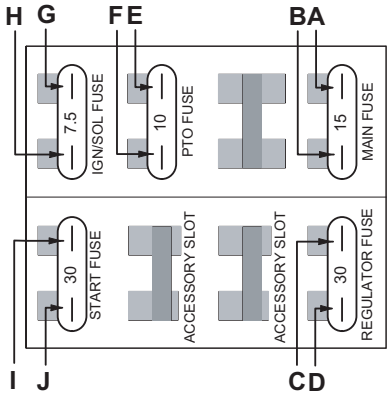

Figure 23

ENGINE STARTS, BUT DIES WHEN KEY SWITCH IS RELEASED (CONTINUED)

ALL KUBOTA DIESEL MODELS EXCEPT THOSE WITH D902 ENGINES

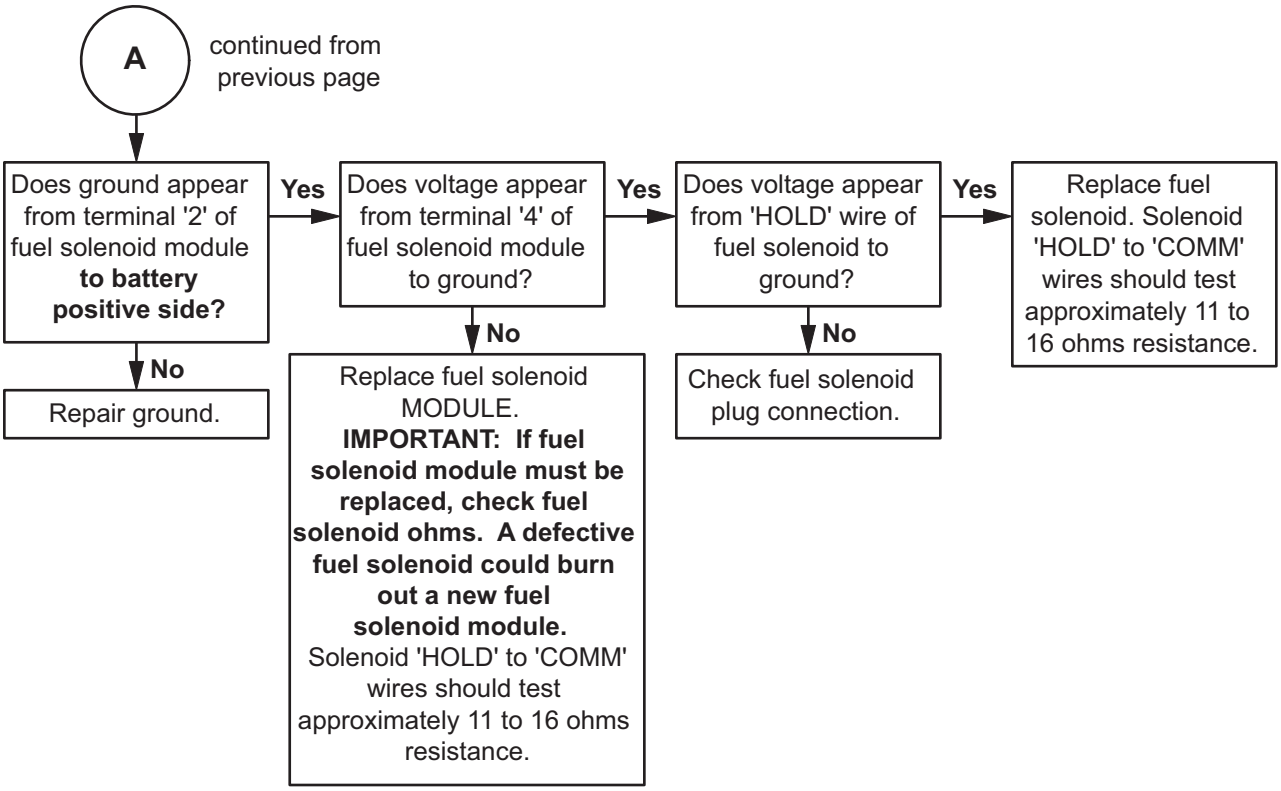

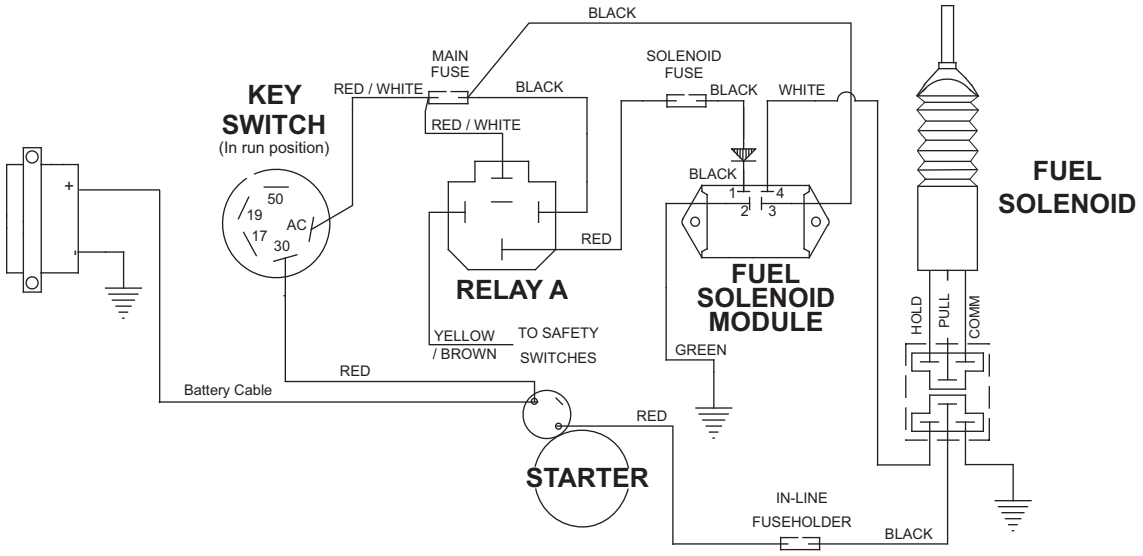

Figure 24

ENGINE STARTS, BUT DIES WHEN KEY SWITCH IS RELEASED

KUBOTA DIESEL MODELS WITH D902 ENGINES

Notes:

1. All tests are made with wires in place on their respective switches.
2. Problem is in the 'HOLD' circuit of the fuel solenoid.
3. Relay A is the relay with 1 yellow, 1 black and 2 red wires.

Steering levers OUT, PTO switch 'OFF', parking brake 'OFF'. Voltage tests are performed with a voltmeter or test light to battery ground (negative post).

Key switch is in 'RUN' position for each test unless otherwise noted.

No

Does voltage appear from terminal 'D' of fuel solenoid module to ground? (Refer to figure 25)

Yes → Does voltage appear from terminal 'E' of fuel solenoid module to ground?

Yes → Call Grasshopper Service Department

No → Does voltage appear from terminal 'G' of ignition fuse to ground?

Yes → Replace ignition fuse.

No → Replace control relay A. This is the relay with 1 yellow, 1 black and 2 red wires.

No → Does voltage appear from terminal 'A' of main fuse to ground? (Refer to figure 26)

Yes → Does voltage appear from terminal 'B' of main fuse to ground?

Yes → Check for broken wire between fuse block and fuel solenoid module.

No → Replace main fuse.

No → Replace key switch.

Fuel Solenoid Module Test Points

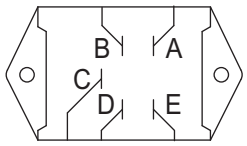

Figure 25

Fuse Block Test Points

Fuse block styles will vary.
Be sure you are checking designated fuse.

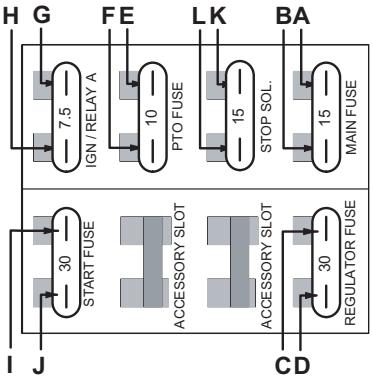

Figure 26

ENGINE STARTS, BUT DIES WHEN KEY SWITCH IS RELEASED

BRIGGS, KAWASAKI & KOHLER MODELS

Notes:

1. If engine cranks and starts but dies when key switch is released, then PTO switch, right and left steering switches, carburetor solenoid and stop relay are functioning properly.
2. Problem is a blown light/aux. fuse, a fuse block connection or a bad key switch.
3. All tests are made with wires in place on their respective switches.

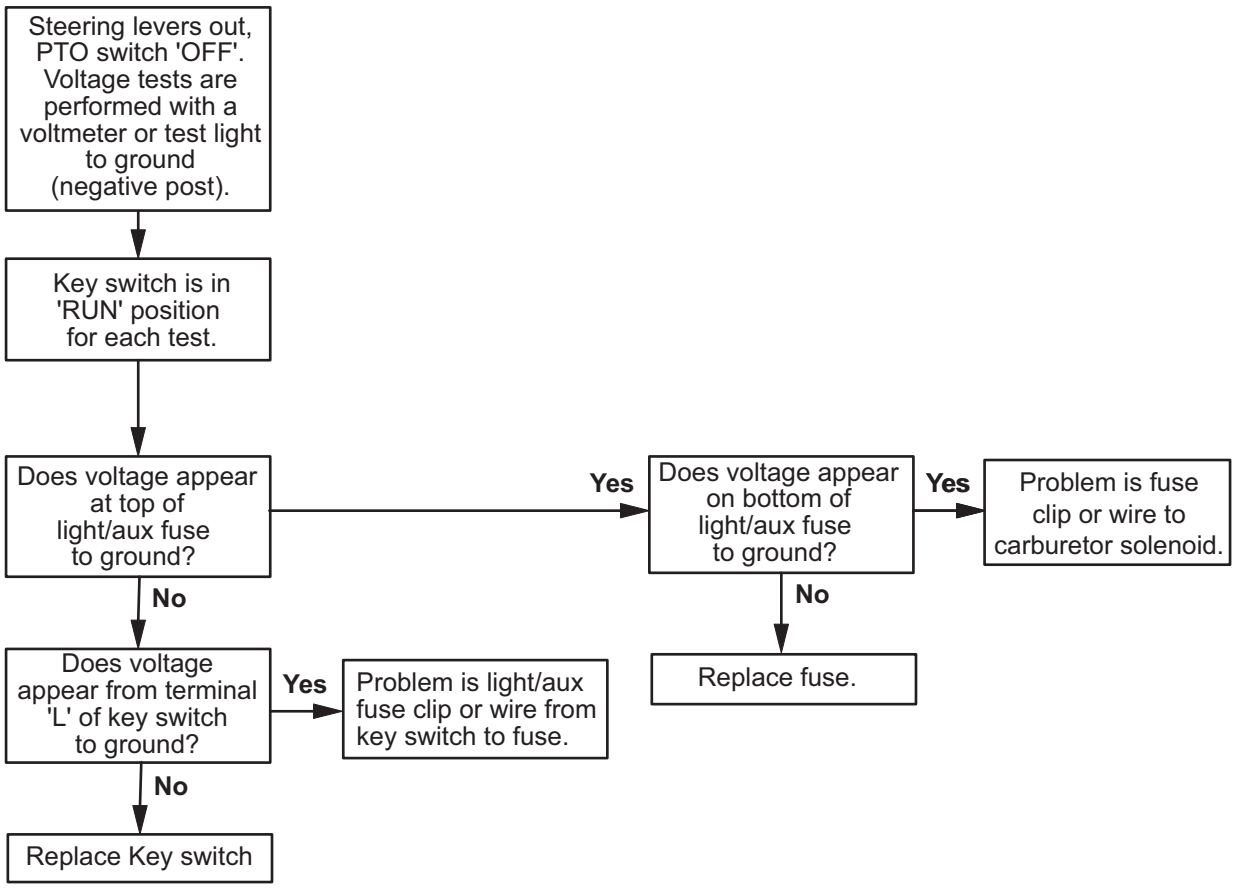

KUBOTA DIESEL MODELS WITH D902 ENGINES

Notes:

1. **Check STOP SOLENOID fuse (15 amp). The engine will not shut off if this fuse is blown or if fuse block terminals are loose or corroded.**
2. **IMPORTANT:**
   - **A. For the tests on this page, unplug stop solenoid.**
   - **B. Before performing tests, check ground source for fuel solenoid module. The starter plate on the right side of the engine has two ground bolts. The fuel solenoid module ground wire is green with a yellow tracer and is connected to the TOP bolt. Tighten this connection if it is loose. If connection is already tight, check for damaged wire at eyelet.**
3. Check for DC voltage in all tests.
4. Steering levers out, PTO off for all tests.
5. Remember to reconnect stop solenoid when testing is completed.

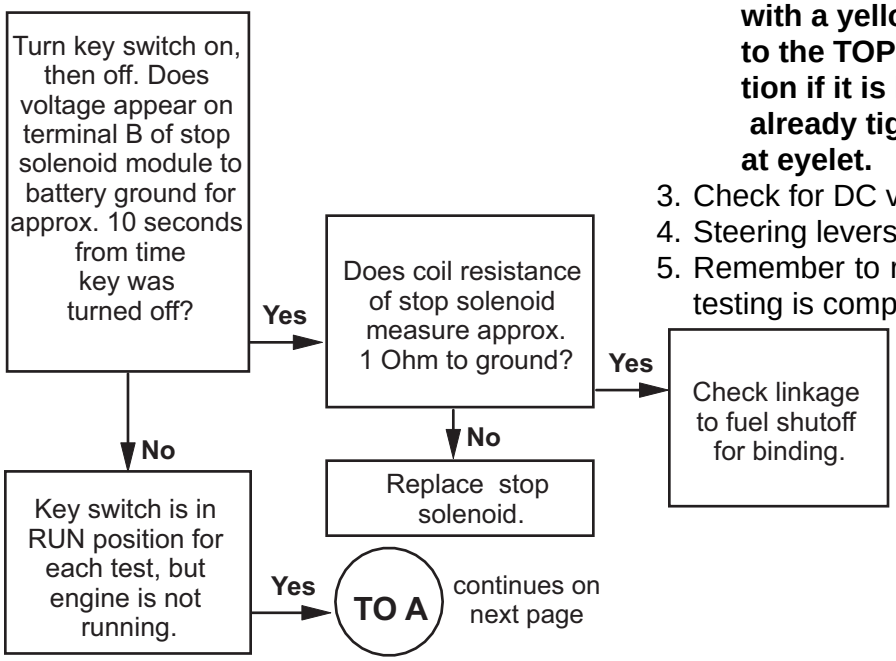

Fuel Solenoid Module Test Points

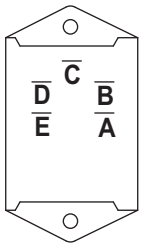

Figure 27

Fuse Block Test Points

Fuse block styles will vary.
Be sure you are checking designated fuse.

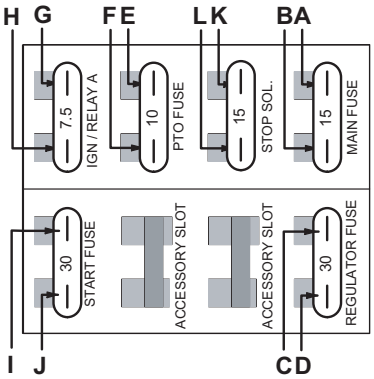

Figure 28

ENGINE STARTS AND RUNS, BUT WILL NOT SHUT OFF

(CONTINUED)

KUBOTA DIESEL MODELS WITH D902 ENGINES

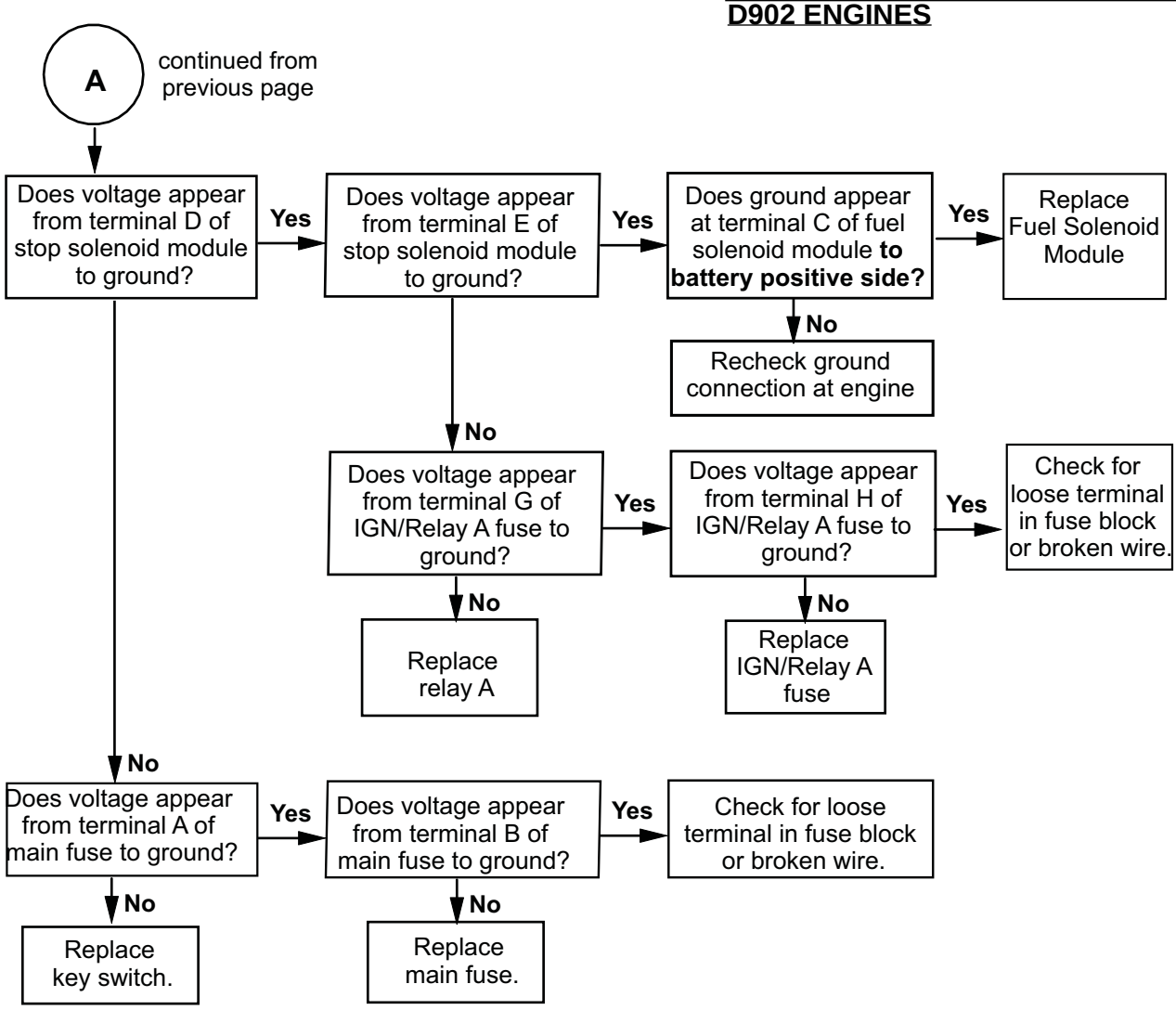

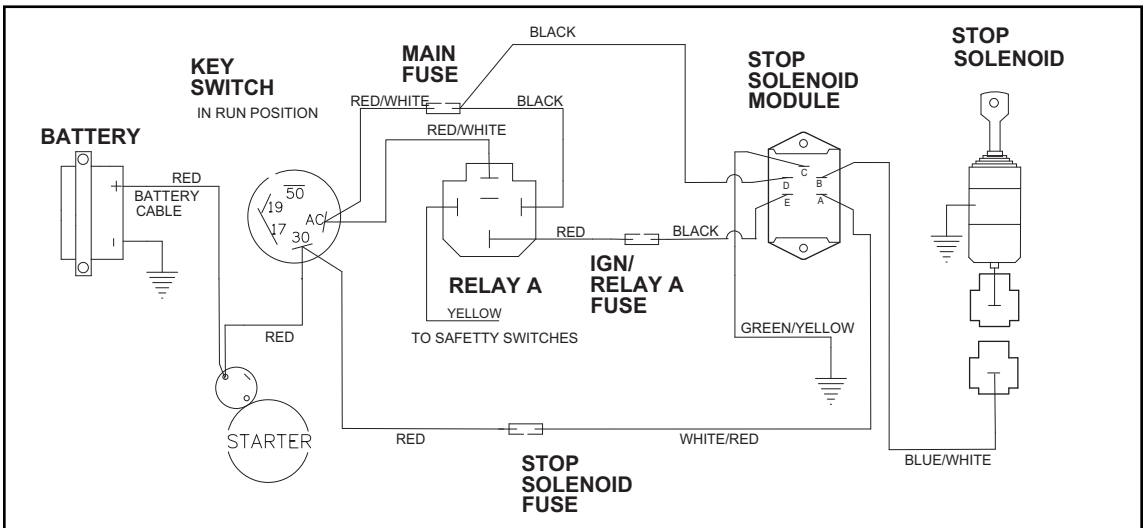

Figure 29

TROUBLESHOOTING PTO CLUTCH

ALL MODELS EXCEPT KUBOTA

Notes:

1. Test clutch by reading ohm's across clutch plug. Remove wire connector at clutch body or at clutch lead if wires are not removable.
   See chart on page 38 for acceptable resistance readings.

Steering levers OUT, PTO switch 'ON'. Voltage tests are performed with a voltmeter or test light to battery ground (negative post), unless otherwise noted.

↓

Key switch is in 'RUN' position for each test, but **engine is not running.**

↓

Does voltage appear from terminal 'E' of PTO fuse to ground?

- **No** → Problem is the key switch or wiring from key switch to PTO fuse.
- **Yes** → Does voltage appear from terminal 'F' of PTO fuse to ground?
  - **No** → Replace PTO fuse.
  - **Yes** → Does voltage appear from brown wire at PTO clutch plug to ground?
    - **No** → Replace PTO switch.
    - **Yes** → Does green wire of tractor harness plug show ground when tested **to battery positive side?**
      - **Yes** → Test PTO clutch and terminals (see note above).
      - **No** → Repair clutch ground circuit.

Fuse Block Test Points

Fuse block styles will vary.
Be sure you are checking designated fuse.

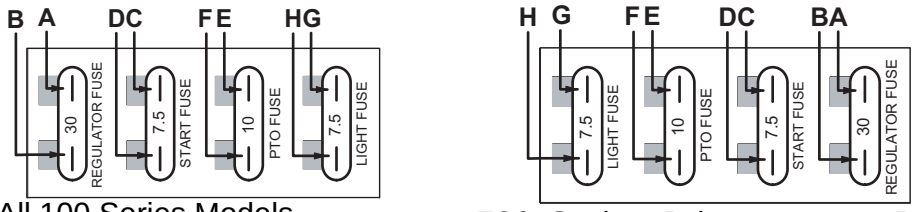

All 100 Series Models
All 200 Series Models
All 600 Series Models
All Briggs Big Block Models

700 Series Briggs except Big Blocks 700 Series Kohler Models
All Kawasaki Models

Figure 30

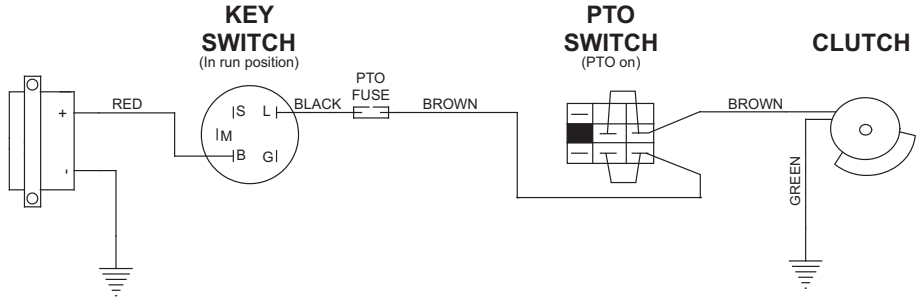

Figure 31

TROUBLESHOOTING PTO CLUTCH

Steering levers OUT, PTO switch 'ON'. Voltage tests are performed with a voltmeter or test light to battery ground (negative post).

↓

Key switch is in 'RUN' position for each test, but **engine is not running**.

↓

Does voltage appear from terminal 'F' of PTO fuse to ground?

- **No** → Replace PTO fuse.
- **Yes** → Does voltage appear from brown wire at PTO clutch plug to ground?
  - **No** → Replace PTO switch.
  - **Yes** → Does green wire of tractor harness plug show ground?
    - **No** → Repair clutch ground circuit.
    - **Yes** → Test PTO clutch and terminals (see note above).

ALL KUBOTA MODELS

Notes:

1. If engine starts and runs, relay 'A' is working properly.
2. Test clutch by reading ohm's across clutch plug. Remove wire connector at clutch body or at clutch lead if wires are not removable. See chart on page 38 for acceptable resistance readings.
3. Voltage tests are performed with the seat switch wires removed and a jumper installed across the two wires.

Warning!

Jumper must be removed and wires reinstalled on seat switch after test is complete and before machine is returned to operation.

Fuse Block Test Points

Fuse block styles will vary.
Be sure you are checking designated fuse.

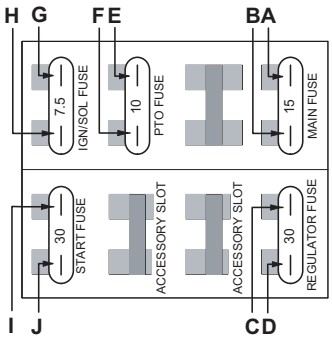

Figure 32

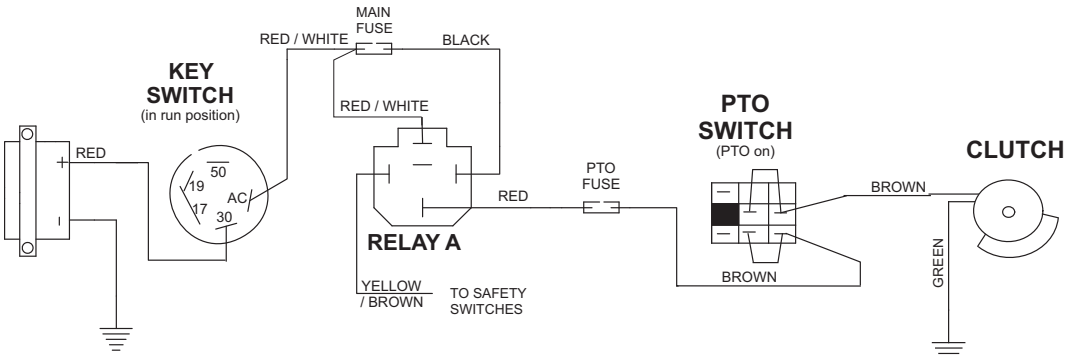

Figure 33

ACCEPTABLE CLUTCH RESISTANCE RANGE IN OHMS

		1" Clutches		1.125" Clutches	
		1" Clutch with Center Stop* & 1" Spot Brake Clutch**	1" Clutch without Center Stop	1.125" Clutch with Center Stop & 1.125" Spot Brake Clutch**	1.125" Clutch without Center Stop
MID MOUNTS	100 Series & 226V	2.6 - 3.0	-	-	-
MID MOUNTS	200 300 400 Series except 226V	-	-	1.6 - 2.0	-
FRONT MOUNTS	All 600 Series except 618 & 620T with Serial# 5300000 & above	2.6 - 3.0	2.4 - 2.6	-	-
FRONT MOUNTS	618 & 620T with Serial # 5300000 & above	-	-	1.6 - 2.0	-
FRONT MOUNTS	700 Series with Briggs engines excluding Briggs Big Block	2.6 - 3.0	2.4 - 2.6	-	-
FRONT MOUNTS	700 Series with Kohler engines & Briggs Big Block engines	-	-	1.6 - 2.0	2.4 - 2.6
FRONT MOUNTS	All 700 & 900 Series Kubota & Kawasaki Models	-	-	1.6 - 2.0	2.4 - 2.6

* 'Center Stop' refers to the stainless steel piece located between the hold magnets. To check if the clutch has this stop, look on the front side of the anti-rotation flange.

** The Spot Brake Clutch can be identified by a one piece plate bolted on the front side of the anti-rotation flange.

TROUBLESHOOTING ELECTRIC LIFT (STRAP STYLE)

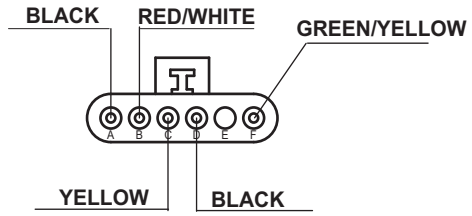

Figure 34

ELECTRIC LIFT DOES NOT OPERATE

Notes:

1. For testing refer to 6-way Weather-pack connector under seat.
2. Connector view is from back (wire side) (see Figure 34).
3. Toggle switch is not activated.

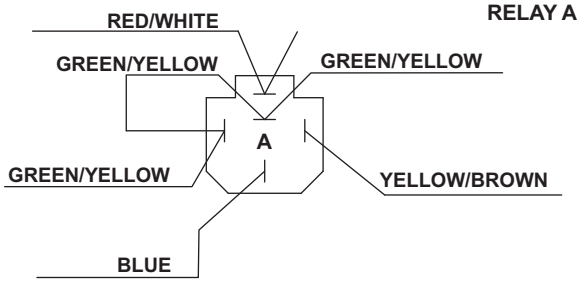

Figure 35

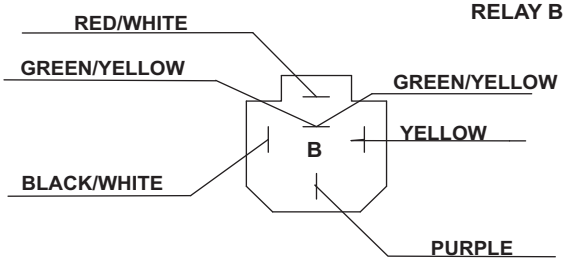

Figure 36

NOTE:
All tests are performed with plug connected.

To access Weather-Pack terminals, use a small screwdriver to release latches on either side of cover. Flip up cover and slide green cable seals up the wires to expose terminals.

Do not penetrate wire covering to test. This can lead to wiring component failure.

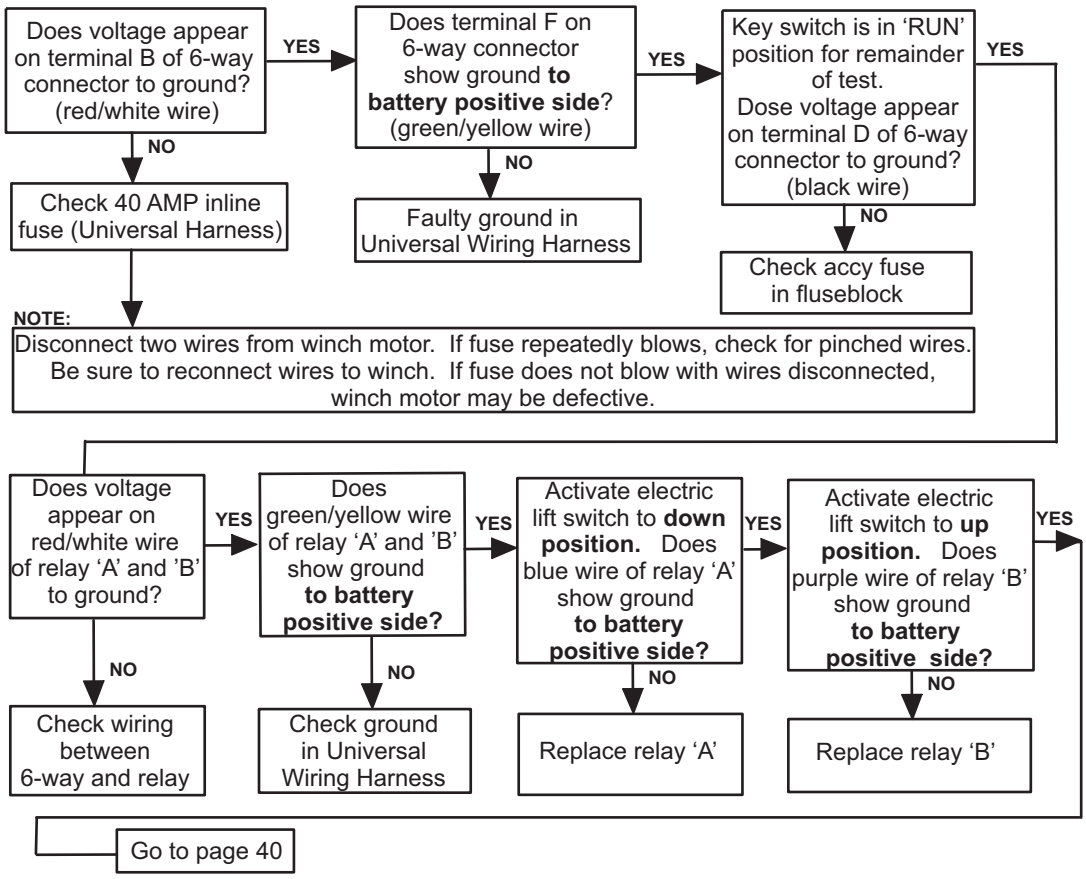

TROUBLESHOOTING ELECTRIC LIFT (STRAP STYLE)

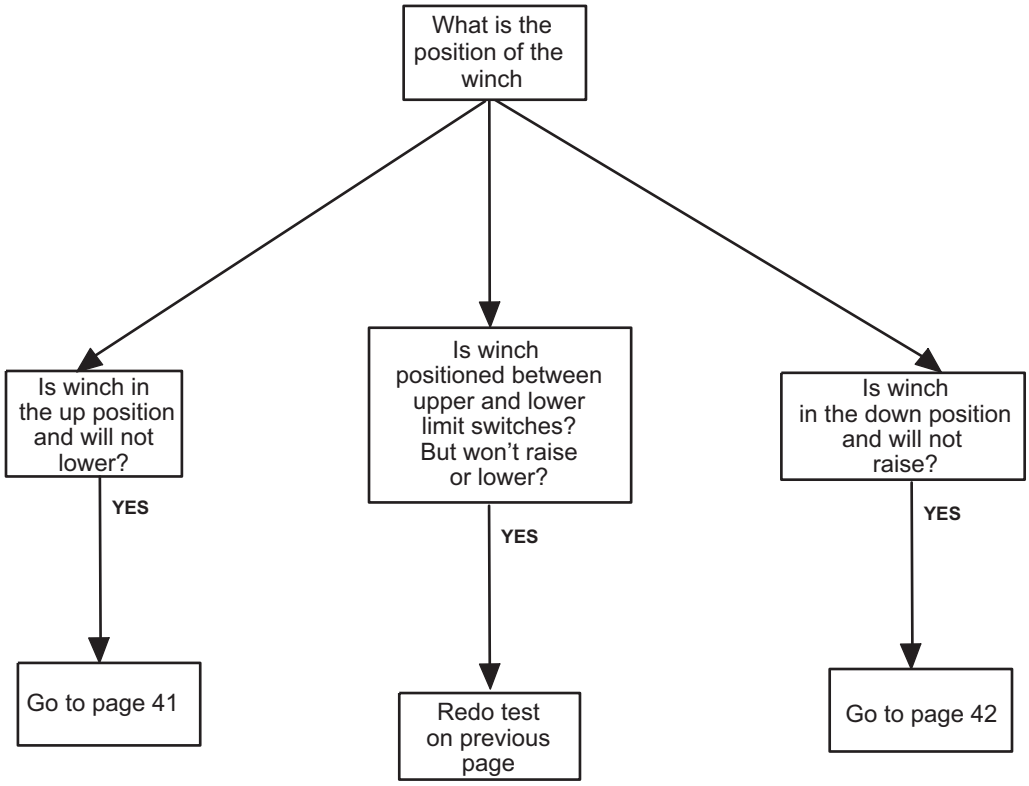

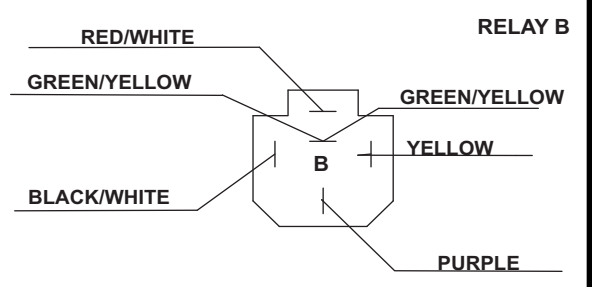

Figure 37

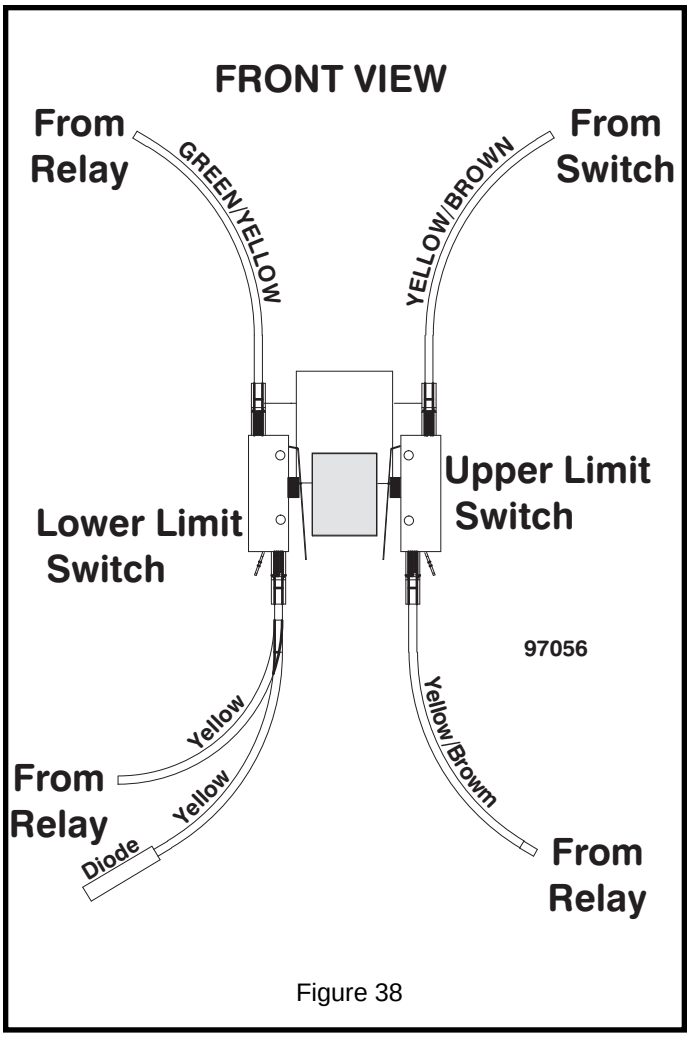

Figure 38

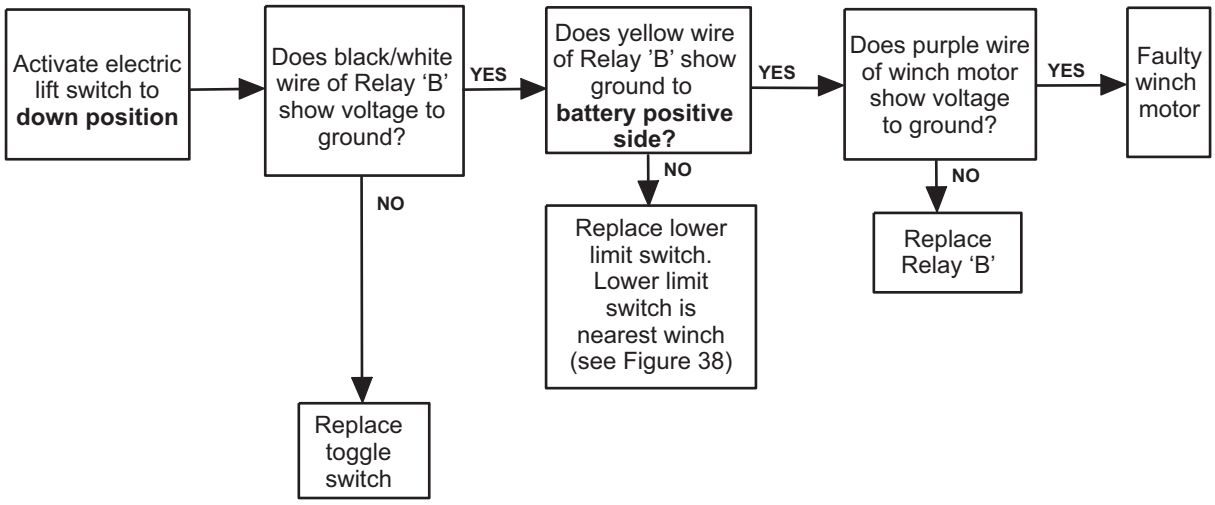

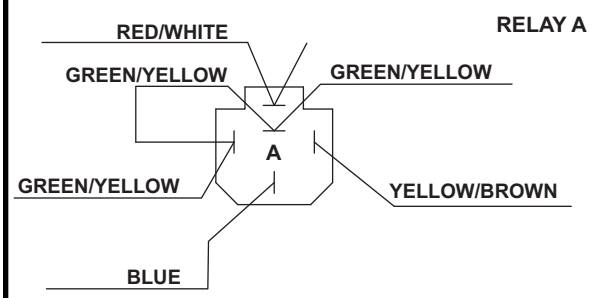

Figure 39

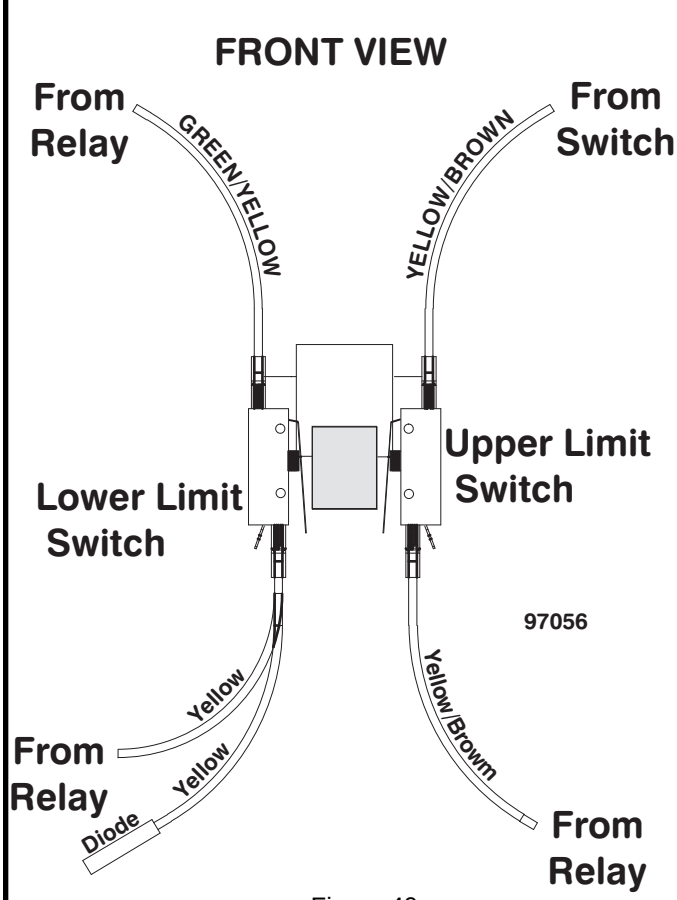

Figure 40

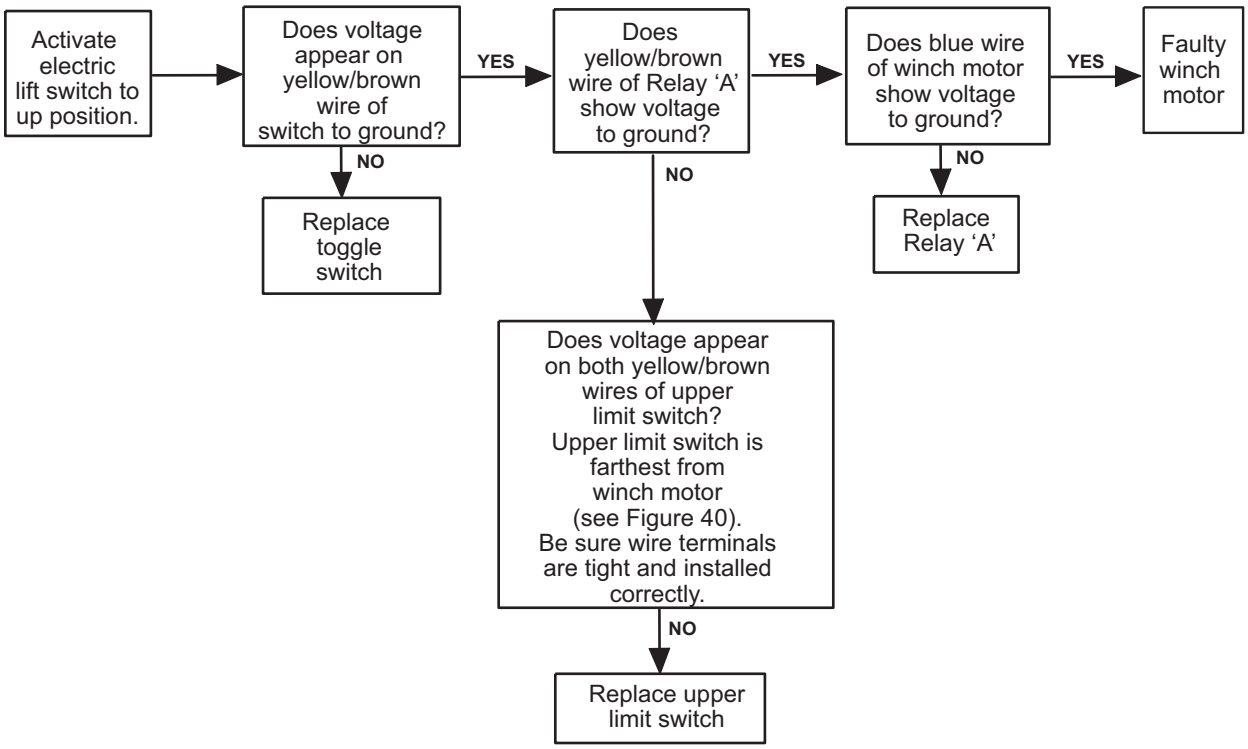

TROUBLESHOOTING ELECTRIC LIFT (STRAP STYLE)

WIRING DIAGRAM

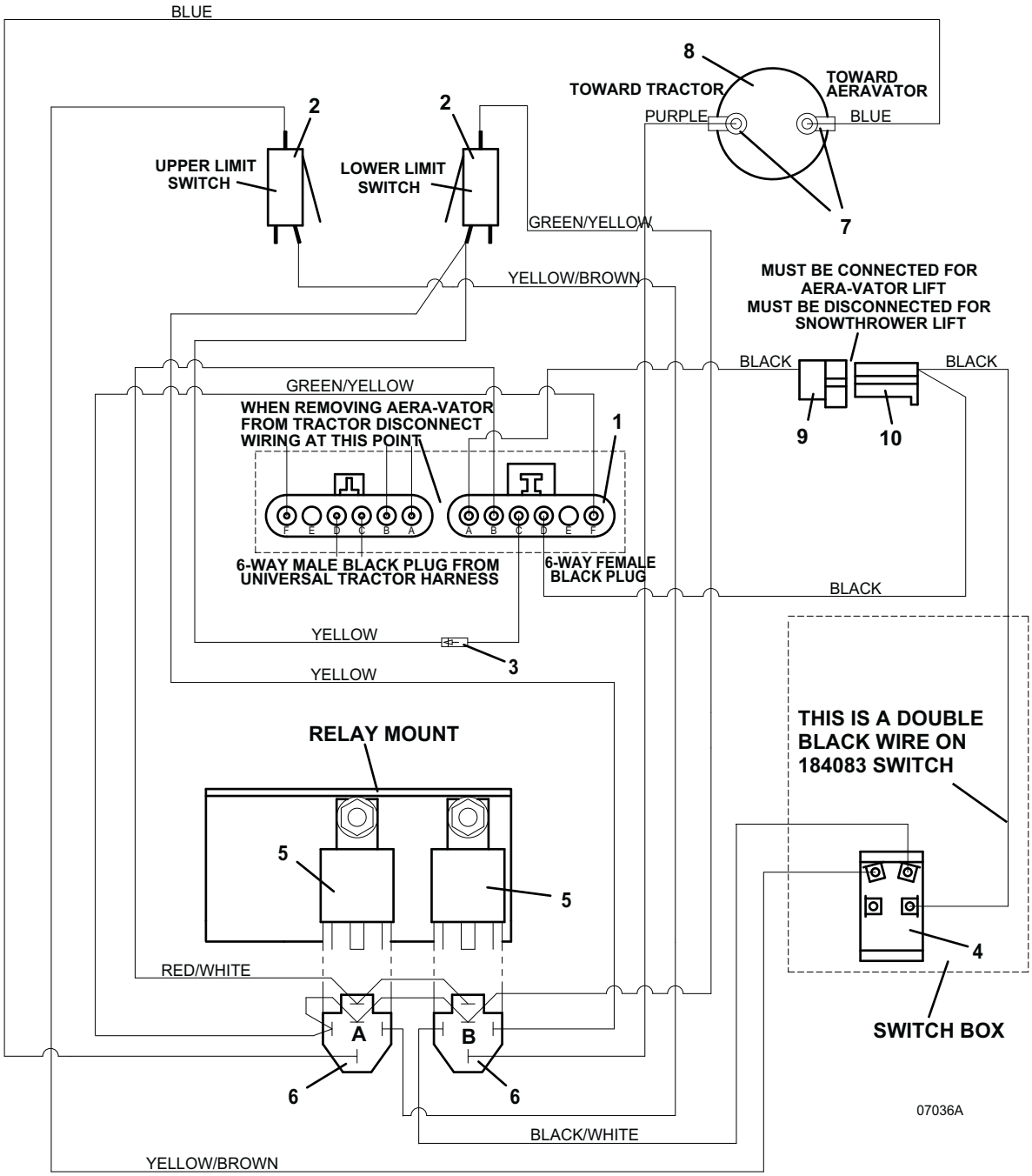

Item No.	Order No.	Description	Item No.	Order No.	Description
	605859	Wiring Assembly	5	604712	Relay
		(includes items 1 & 3-7)	6	184926	Connector - 5 way Female Terminal
1	184969	Connector - 6 way	7	425217	Eyelet Insulator
2	183855	Switch	8	604515	Lift Drive Assembly
3	202105	Diode	9	184919	Connector - Pin Housing
4	184177	Switch - Rocker	10	184921	Connector - Housing
	184083	Switch			

HYDRAULIC LIFT DOES NOT WORK

SEPARATE TILT SWITCH / DELAY TIMER STYLE

Notes:

1. "Hydraulic switch" refers to either the push button switch in the steering lever or the toggle switch in the console.

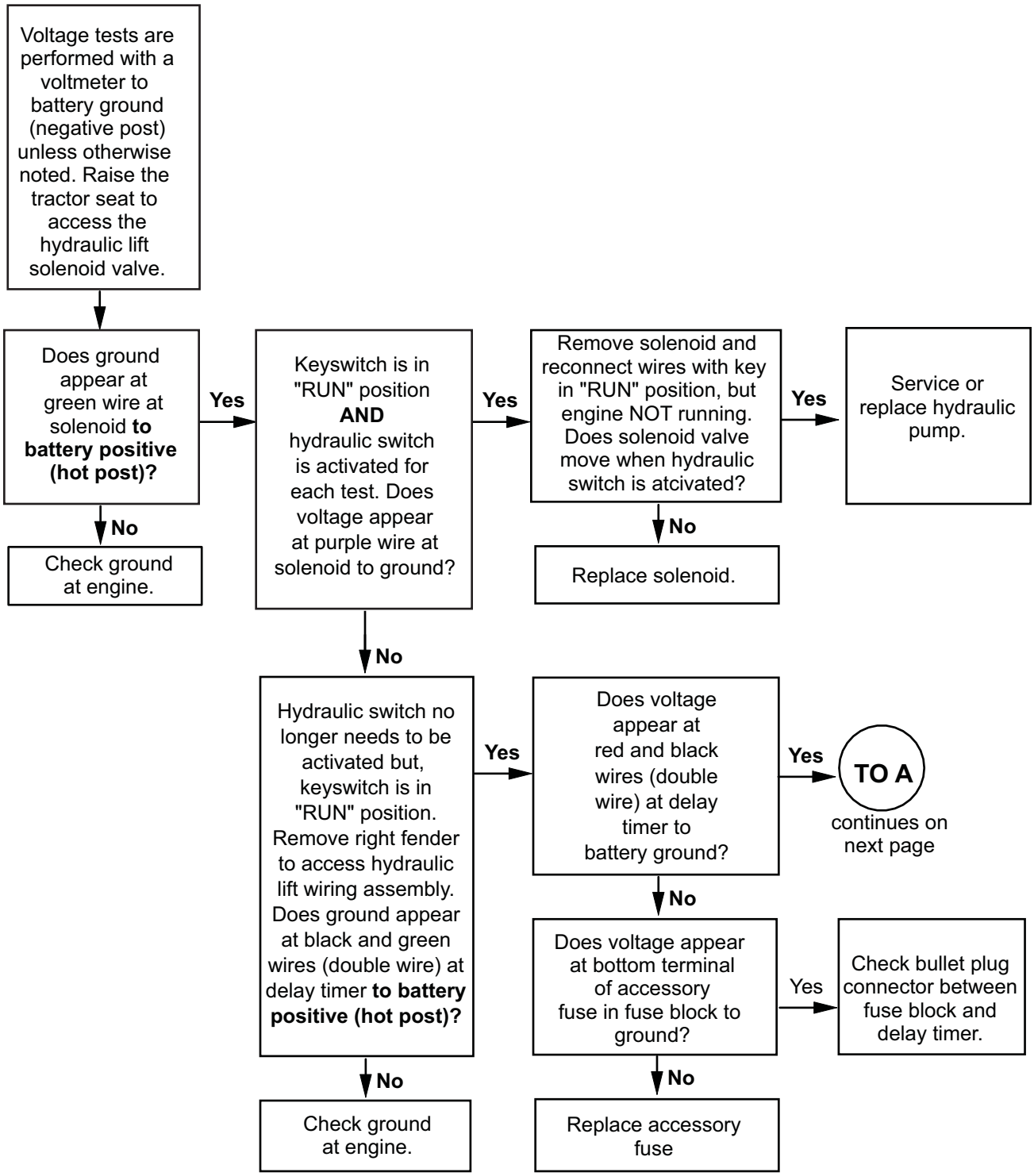

HYDRAULIC LIFT DOES NOT WORK (CONTINUED)

SEPARATE TILT SWITCH / DELAY TIMER STYLE

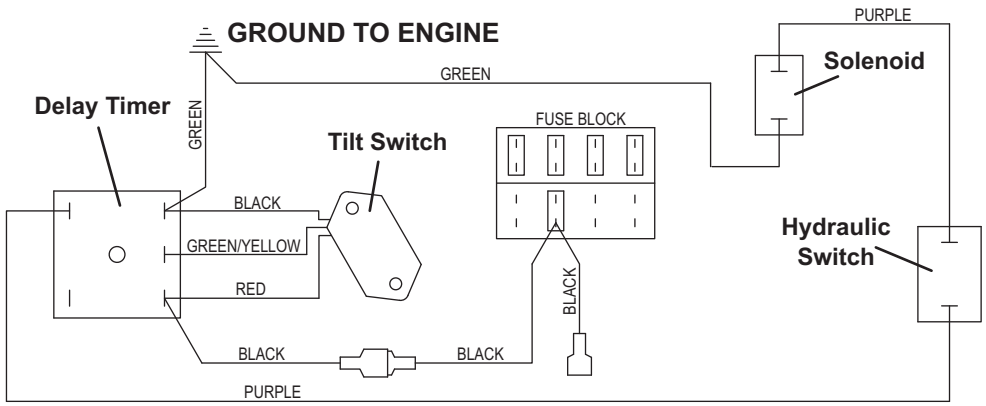

Figure 41

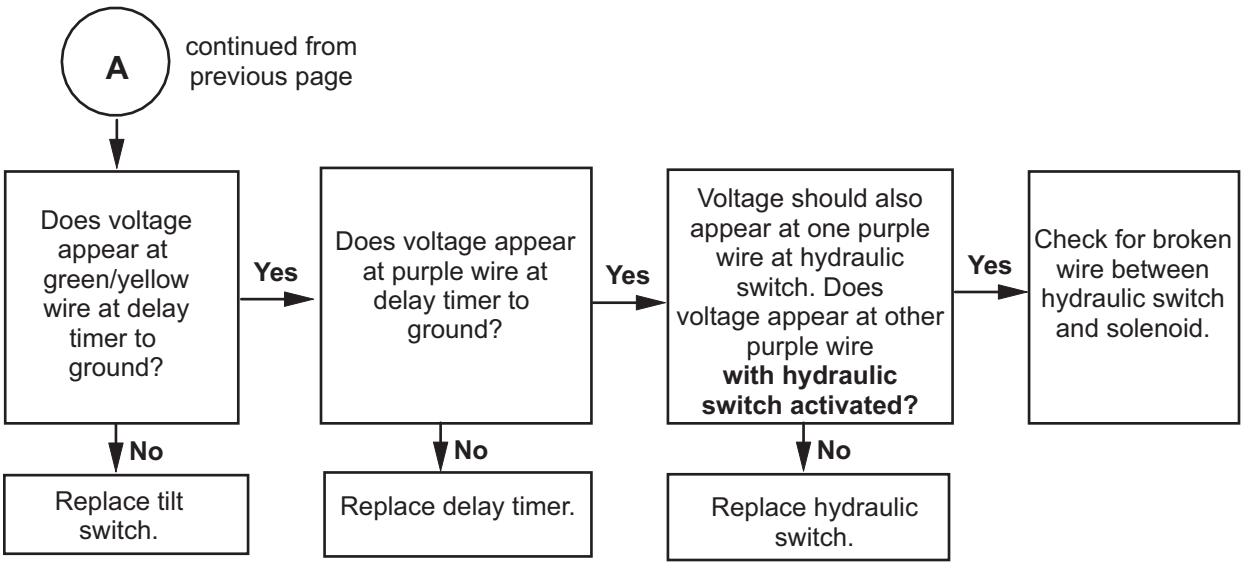

HYDRAULIC LIFT DOES NOT WORK

ONE PIECE TILT SWITCH / DELAY TIMER STYLE

Notes:

1. "Hydraulic switch" refers to either the push button switch in the steering lever or the toggle switch in the console.

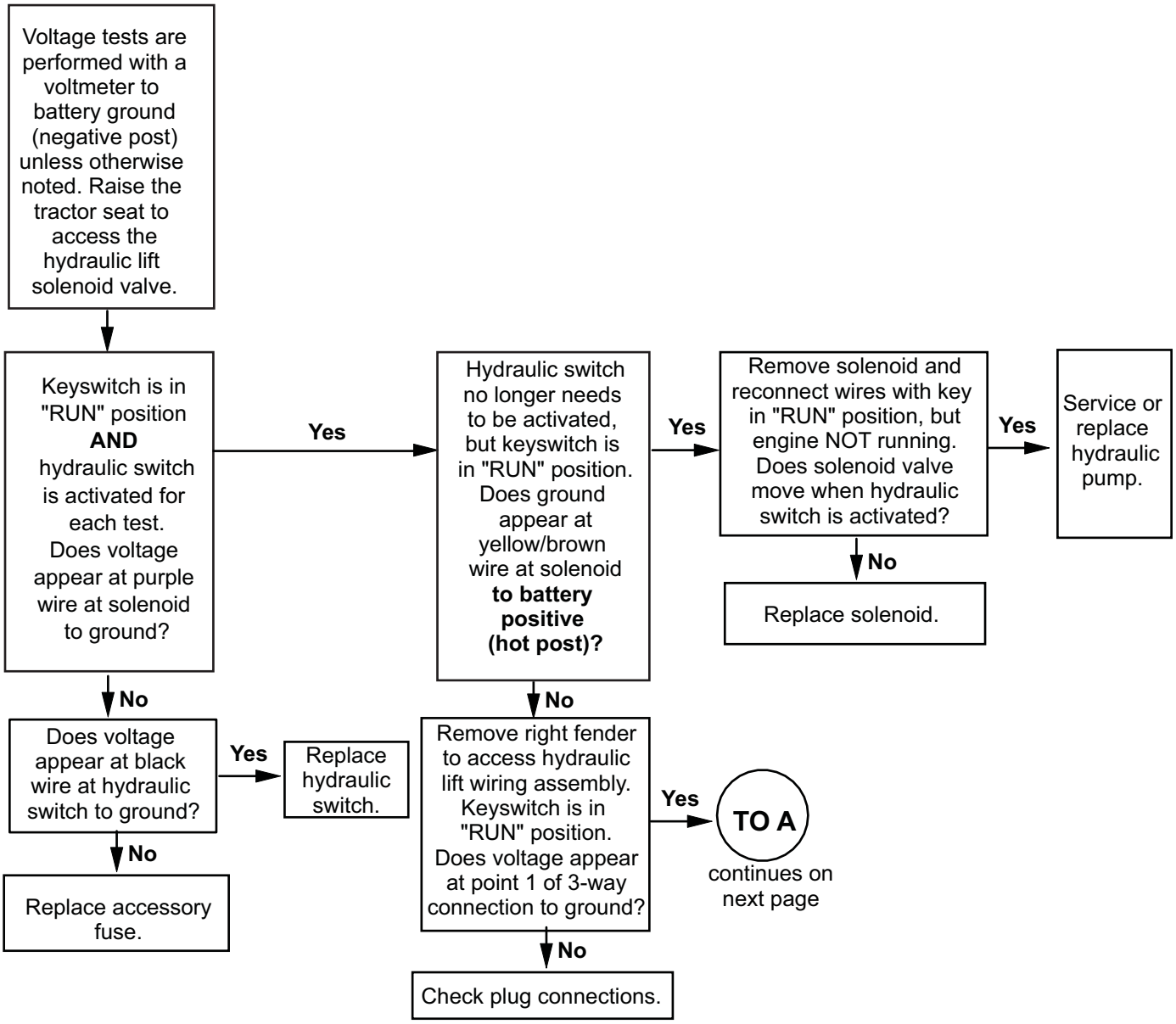

HYDRAULIC LIFT DOES NOT WORK

ONE PIECE TILT SWITCH / DELAY TIMER STYLE

(CONTINUED)

NOTE:
All tests are performed with plug connected.

To access Weather-Pack terminals, use a small screwdriver to release latches on either side of cover. Flip cover up and slide green cable seals up the wires to expose terminals.

Do not penetrate wire covering to test. This can lead to wiring component failure.

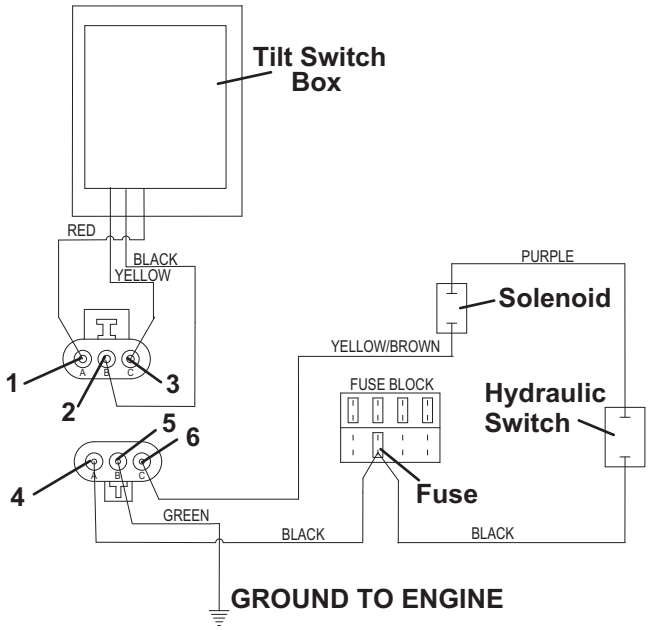

Figure 42